SCALE 1/35 AF35153
HEMTT M983 Tractor & M901 Launching Station of MIM-104 Patriot SAM System (PAC-2) 愛國者二型防空飛彈

AF35S87

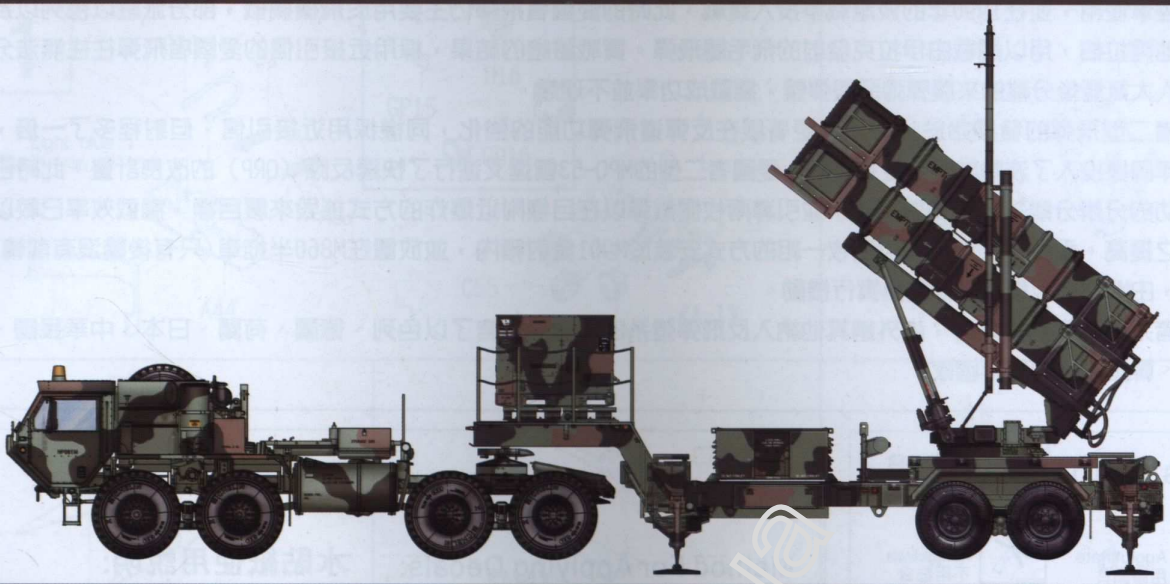

During the Cold War in early 1960s, both of the US and USSR deployed their medium-range ballistic missiles nearby counterparty's territory, in Turkey and Cuba respectively. The deployment of SS-4 missiles in Cuba with range covering Washington, DC, caused the crisis to escalating into nuclear war. Unlike the strategic bombers and intercontinental ballistic missiles, reaction time was too short to intercept the medium-range ballistic missiles deployed closed to the country. Thus, all air defense systems were malfunctioned in countering of such missiles. The crisis arose due to the of broken of the balance of terror maintained by the principle of mutual assured destruction, as the party attacked first will be able to paralyze the opponent immediately.

The Cuban Missile Crisis was ended in 1962 when both parties removed their missiles from Turkey and Cuba. The Field Army Ballistic Missile Defense System (FABMDS) conducted by the US Army was cancelled in 1963 due to technical factors. Although the ability of counter medium-range ballistic missile was given up, the US Army was still focused on the development of phased array tracking radar and missile guidance technology in the subsequent Surface-to-Air Missile — Development (SAM- D). It also retained the possibility of counter short-range ballistic missiles capability to provide air defense to the field armies. In 1976, the US Department of Defense officially designated SAM-D as MIM-104 Patriot system. Patriot entered service with the US Army in 1984 after assessing and testing, and saw combat in Gulf War in 1990. Up to this time the Patriot missiles were mainly used in aircraft interception. Some Patriot systems were deployed in Israel and Saudi-Arabia to intercept the Iraqi Scud missiles. However, the success rate was not as overwhelmingly good as suggested. The result concluded that Patriot with proximity fuse were often failed to distinguish between the warhead and body of the separated missile after it returned to atmosphere.

Developed in 1987, PAC-2 missile was optimized for ballistic missile engagements. The new missile, with new proximity fuse, had cover range doubled. PAC-2 was fielded in Gulf War in 1990 as well. Further radar improvements Quick Response Program (QRP) to the MPQ-53 radar of PAC-2 was introduced in 1996. Thus, PAC-2 could recognized separated warhead and missile body successfully and guided 2 missiles to explode near the target to destroy it. The success rate was much higher than before. A set of 4 PAC-2 missiles were stored in M901 launching station, transported on an M860 semi-trailer and towed by Oshkosh M983 HEMTTs or other vehicles.

Besides the United States, Patriot systems were also sold to countries in the theater missile defense, including Israel, Germany, the Netherlands, Japan, the Republic of China, Greece, South Korea and Belgium, etc.

冷戰時期的1960年代初期，中程彈道飛彈先後被美蘇兩國部署在臨近對方國土的土耳其與古巴境內，尤其是部署於古巴的SS-4飛彈，射程涵蓋華盛頓哥倫比亞特區，為此一度引來核戰爆發的危機。危機形成的原因在於，與過去的戰略轟炸機與洲際彈道飛彈相較，這種臨近國土部署的敵方中程彈道飛彈，由於反應攔截的時間太短，使得當時所有的防空手段在面對中程彈道飛彈時等同失效。先發起攻擊的一方將能立刻癱瘓對手，相互保證毀滅原則所維持的恐怖平衡態勢也將被打破。

modelyn.ua

1962年的古巴飛彈危機在雙方各自從古巴與土耳其撤出中程飛彈後劃下句點。美國陸軍曾提出的「野戰彈道飛彈防禦系統」（FABMDS）也因技術因素，在1963年放棄了其中反中程彈道飛彈的能力，但在延續的「地對空飛彈發展計畫」（SAM-D）中仍然著重相陣雷達的發展和飛彈的導引技術。保留了防禦短程彈道飛彈的可能，提供野戰部隊所需的防空能力。1976年美國國防部將SAM-D正式定名為MIM-104愛國者飛彈系統，經過評估與測試，1984年間交由陸軍使用，並在1990年的波灣戰爭投入實戰，此時的愛國者飛彈仍主要用於飛機攔截，部分派駐以色列以及沙烏地阿拉伯，用以攔截由伊拉克發射的飛毛腿飛彈。實戰驗證的結果，採用近接引信的愛國者飛彈往往無法分辨重入大氣層後分離的來襲彈彈頭與彈體，攔截成功率並不理想。

愛國者二型飛彈的發展始於1987年，更著眼在反彈道飛彈功能的強化，同樣採用近接引信，但射程多了一倍，1990年同樣投入了波灣戰爭。至1996年，愛國者二型的MPQ-53雷達又進行了快速反應（QRP）的改良計畫。此時已能成功的分辨分離後的彈頭與彈體，並引導兩枚攔截彈以在目標附近爆炸的方式摧毀來襲目標，攔截效率已較以往為之提高。愛國者二型飛彈以四枚一組的方式安裝於M901發射箱內，並放置在M860半拖車(只有後輪沒有前輪)之上，由M983拖板車或其他載具實行機動。

愛國者系統除了美國之外，尚外銷其他納入反飛彈體系的同盟，包含了以色列、德國、荷蘭、日本、中華民國、希臘、韓國及比利時等國家。

Illustration:圖示說明

Method For Applying Decals:

1. Clean Model Surface With Wet Cloth.
2. Cut Out Of Decal Sheet And Dip Them In Water For 15 Seconds.
3. Place it on proper position on model.
4. Slide off base paper leaving decals On Model With Wet Finger Tip.
5. Move Decals To Exact Position, Push Out Excess Water Under Decal With Soft Cotton Cloth.
6. When Decals Get Dry Then Complete.

水貼紙使用說明:

1.將模型表面擦乾淨
2.將貼紙剪下泡入清水中約15秒
3.將泡濕之貼紙取出置於欲貼處旁
4.用指尖輕推貼紙表面使其滑出底紙
5.將貼紙調整至適當位置並輕擦拭水份
6.待其自然乾燥後即完成

Color list: 塗料表

Color \ Brand		GSI Creos			Humbrol	Revell	Lifecolor
		Hobby Color	Mr.Color	Mr.Color Spray			
Bronze green	青銅綠		TC10				
Burnt iron	燒鐵	H76	C61		53		LC26
Flat black	消光黑	H12	C33	J33	33	8	LC02
Flat white	消光白	H11	C62	J62	34	05	LC01
Green FS34079	綠	H309	C309		195		UA52
Leather brown	皮革棕		TC11				
Light blue	淺藍	H45			47		LC58
Orange	橘	H14	C59		18	30	LC55
Red	紅	H3	C3	J3	19	31	LC56
Tire black	輪胎黑	H77	C137		85	302	LC02
Yellow	黃	H4	C4	J4	69	12	LC53

HEMTT M983 Tractor
M983機動戰術卡車

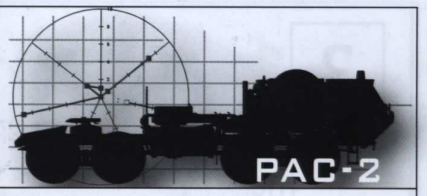

1

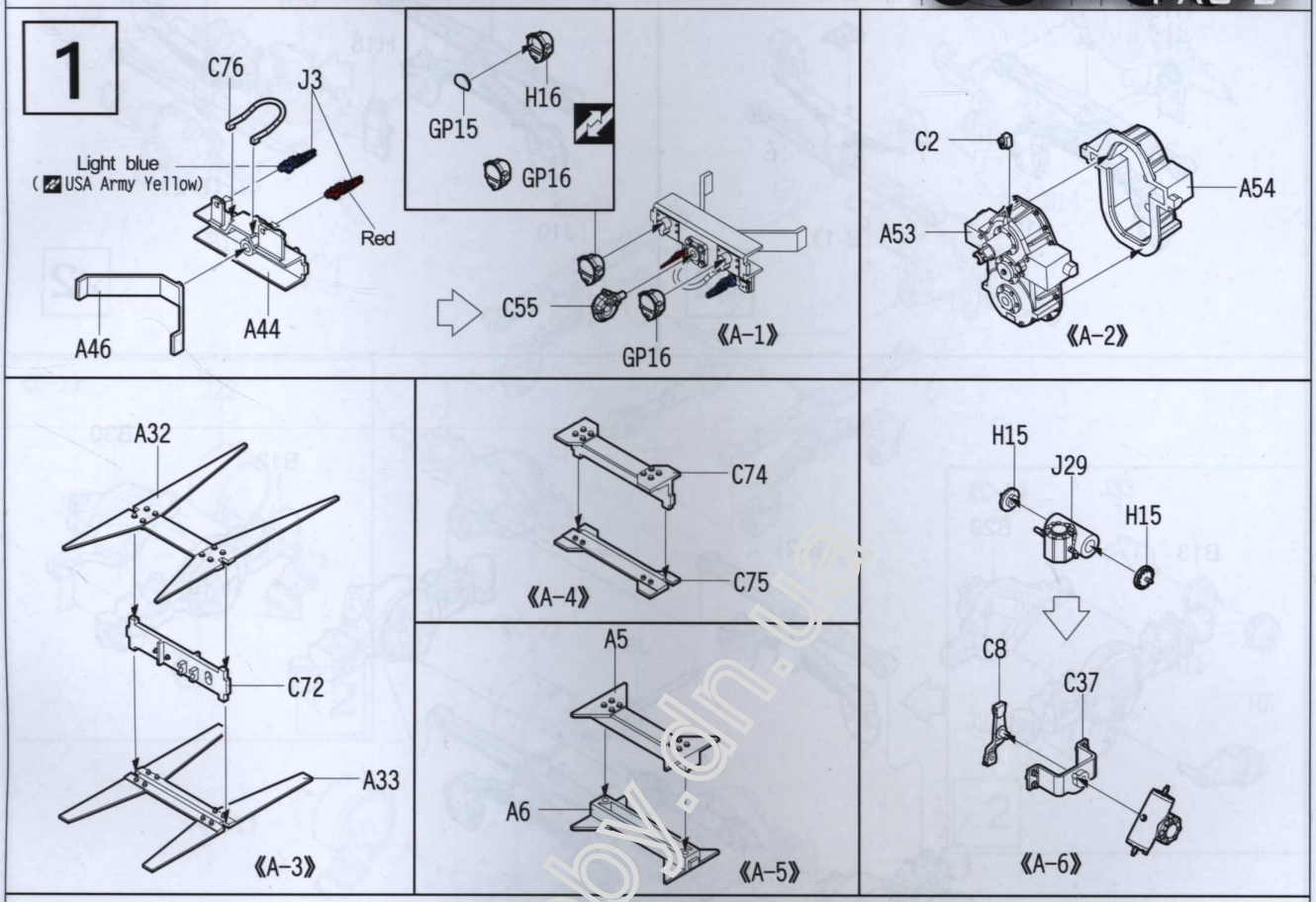

2

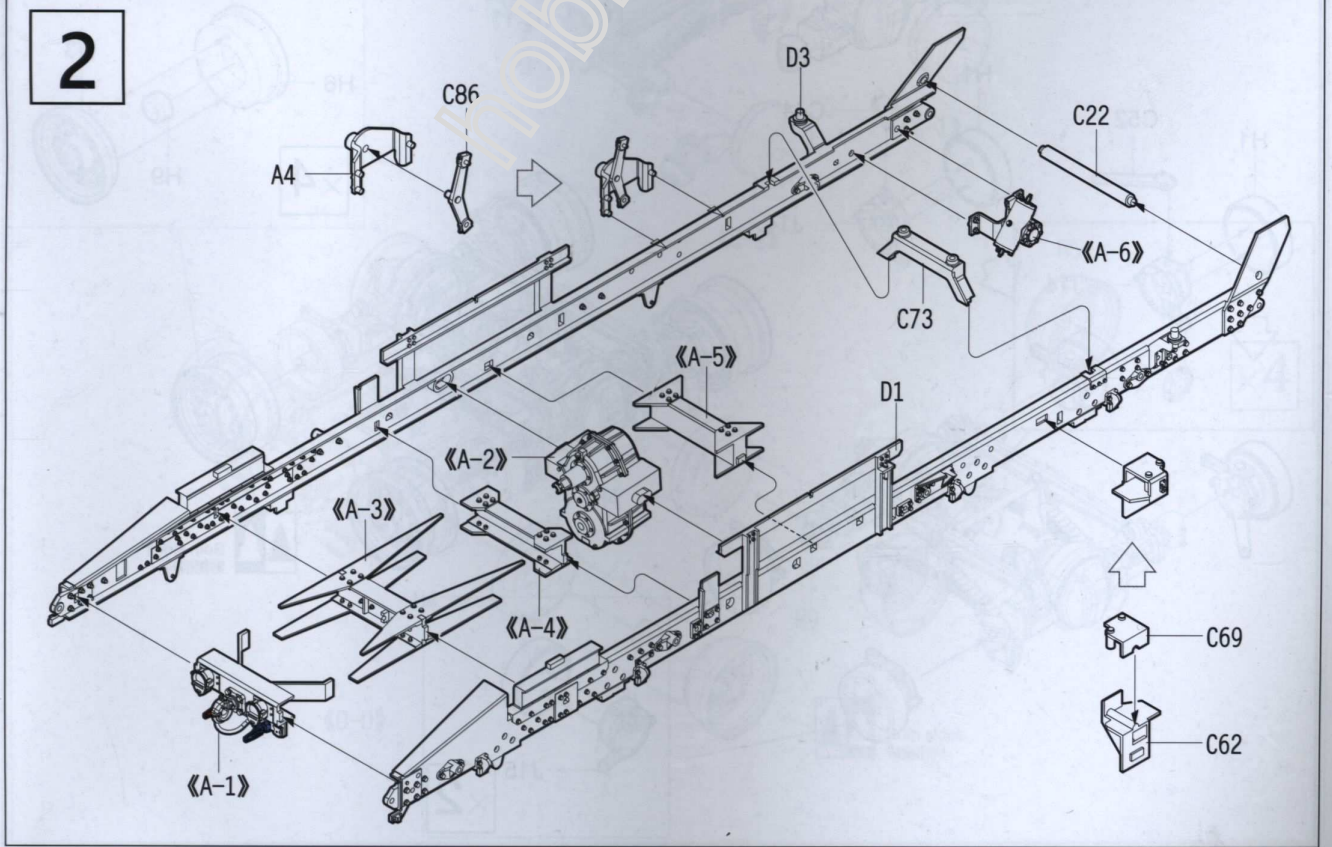

hobby.dn.ua

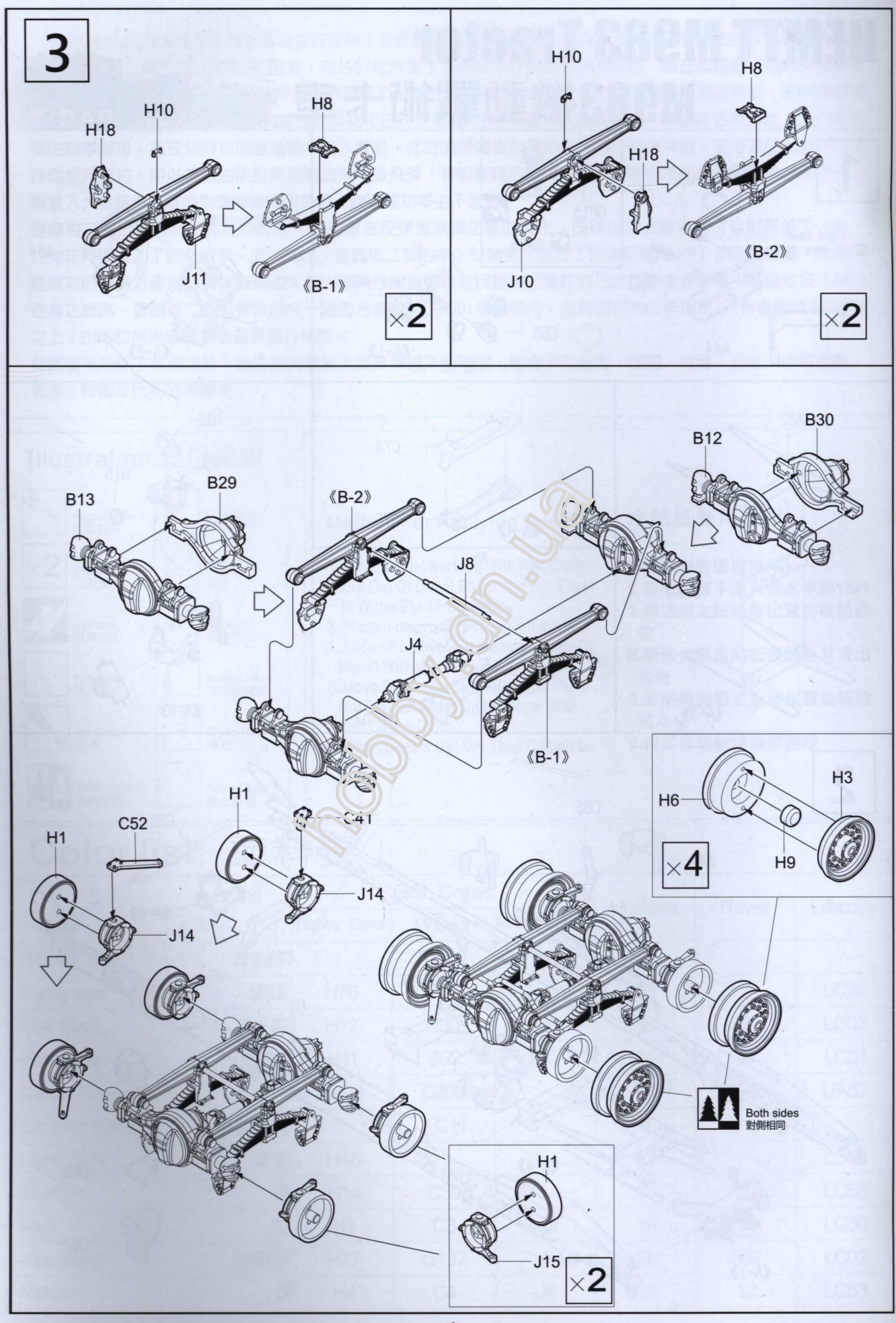
3
H18
H10
H8
J11
《B-1》
×2
H10
H8
H18
J10
《B-2》
×2
B30
B12
B13
B29
《B-2》
J8
J4
《B-1》
H1
C52
H1
C41
J14
J14
H6
H3
H9
×4
Both sides
對側相同
H1
J15
×2

hobby.dn.ua

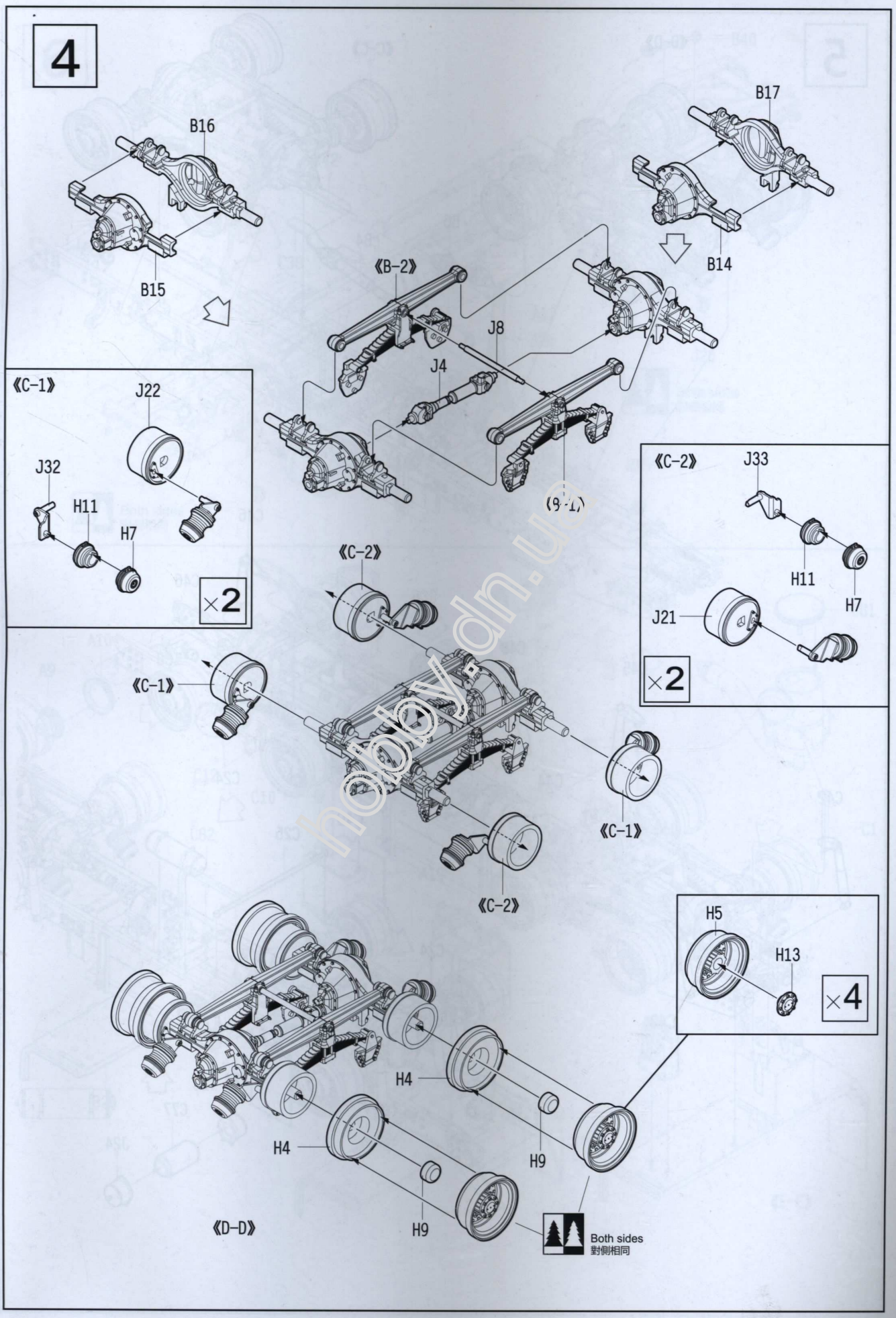
4
B16
B15
B17
B14
《B-2》
J8
J4
《C-1》
J22
J32
H11
H7
×2
《C-2》
J33
H11
H7
J21
×2
《C-2》
《C-1》
《C-1》
《C-2》
H5
H13
×4
H4
H9
H4
H9
《D-D》
Both sides
對側相同

hobby.dn.ua

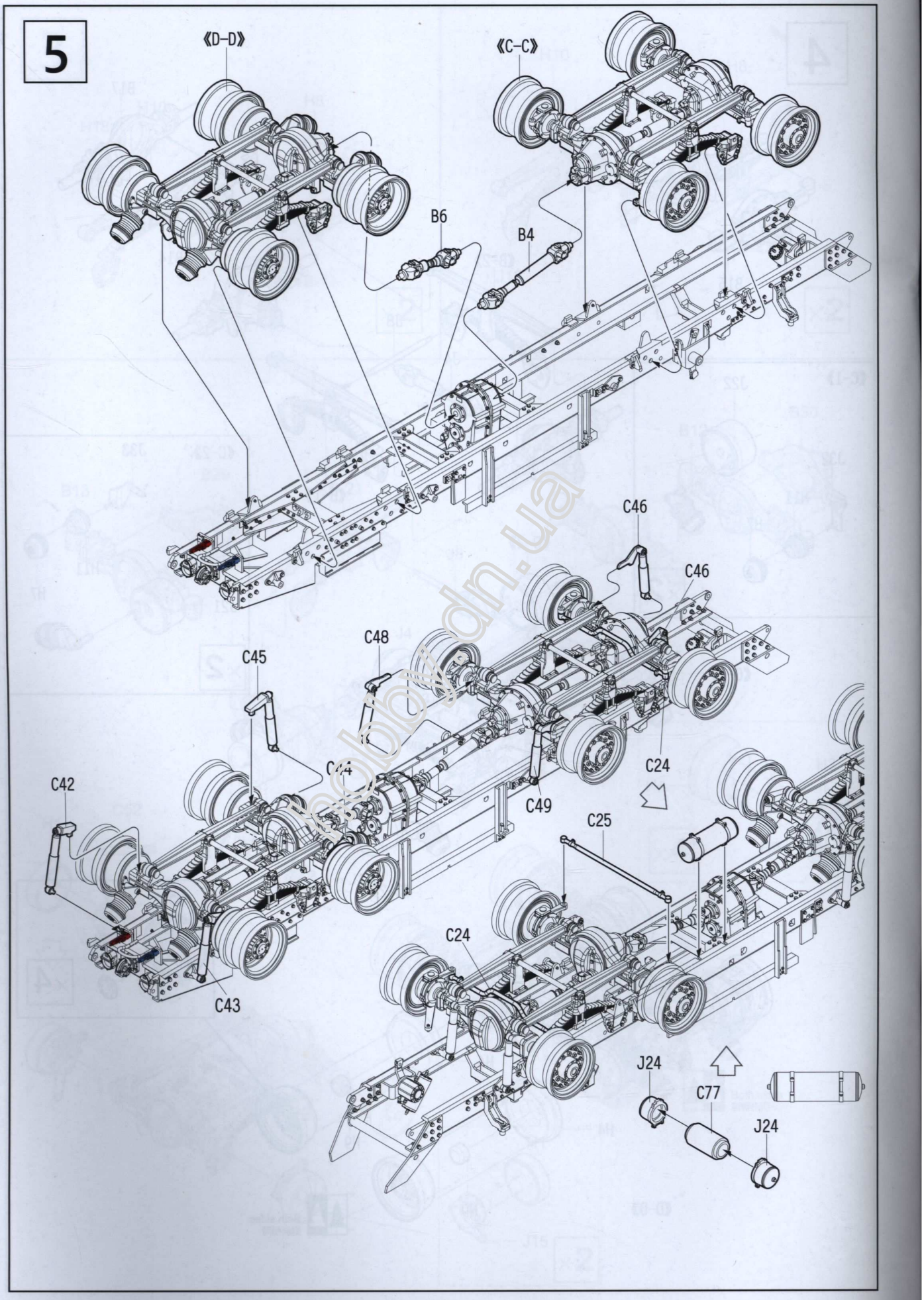

bobbydn.ua

6

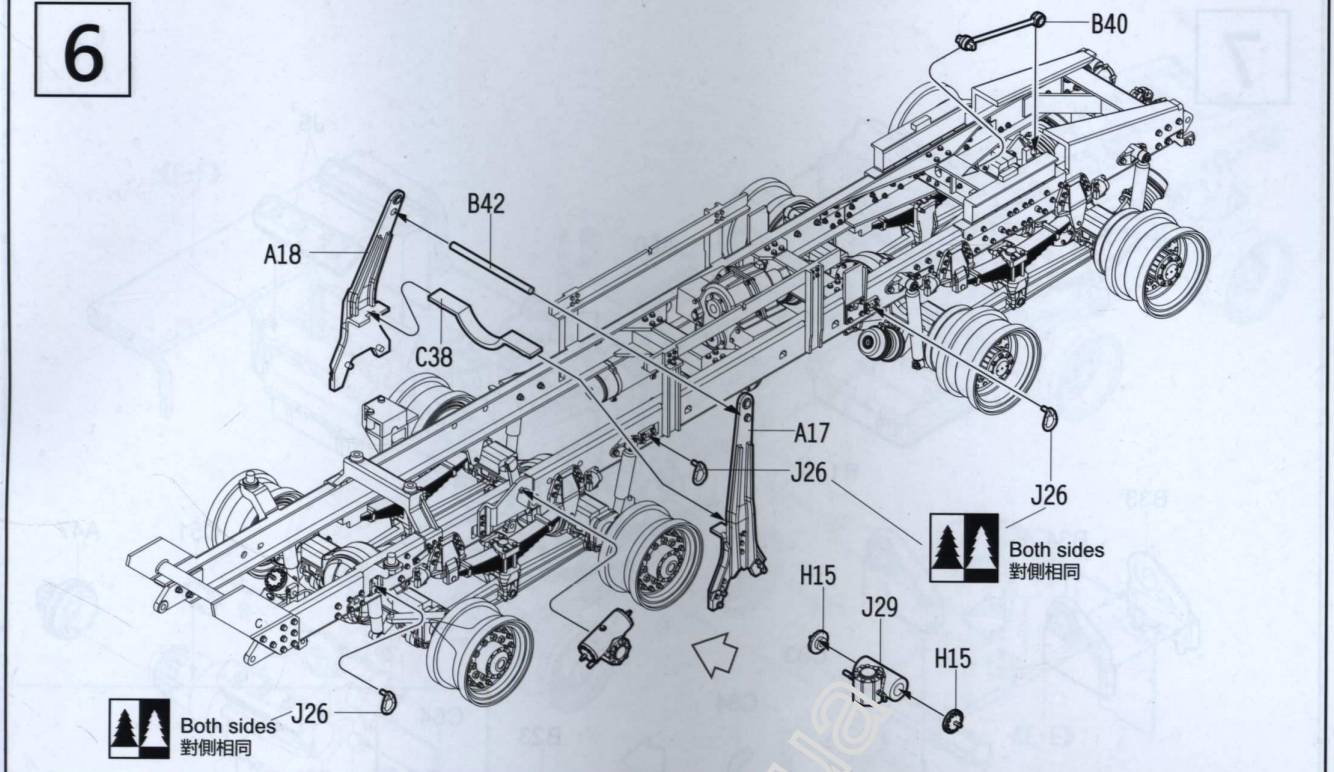
B40
B42
A18
C38
A17
J26
J26
Both sides
對側相同
H15
J29
H15
J26
Both sides
對側相同

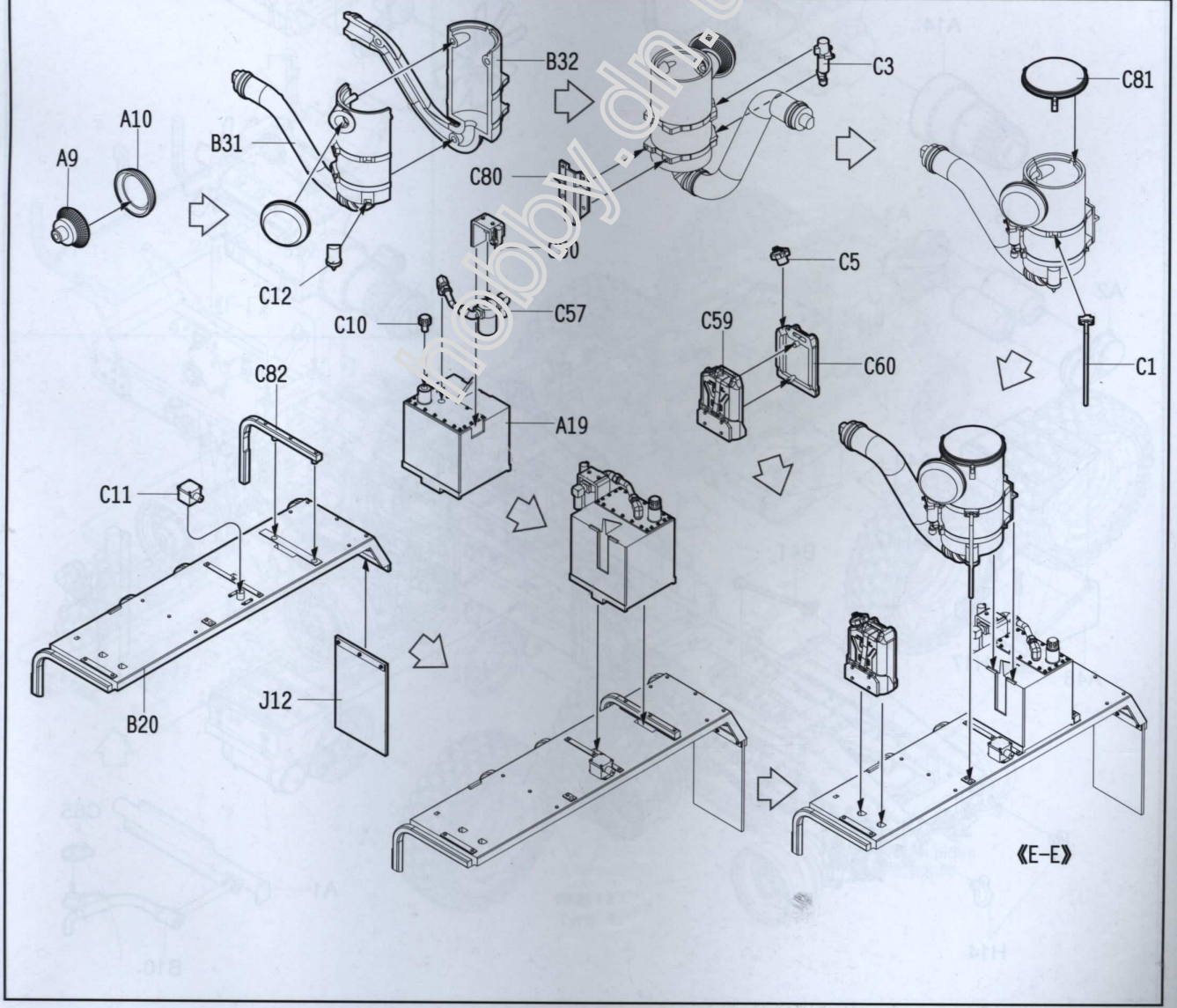
B32
C3
C81
A10
A9
B31
C80
C12
C5
C10
C57
C59
C60
C1
C82
A19
C11
J12
B20
《E-E》

hobby.dn.ua

7

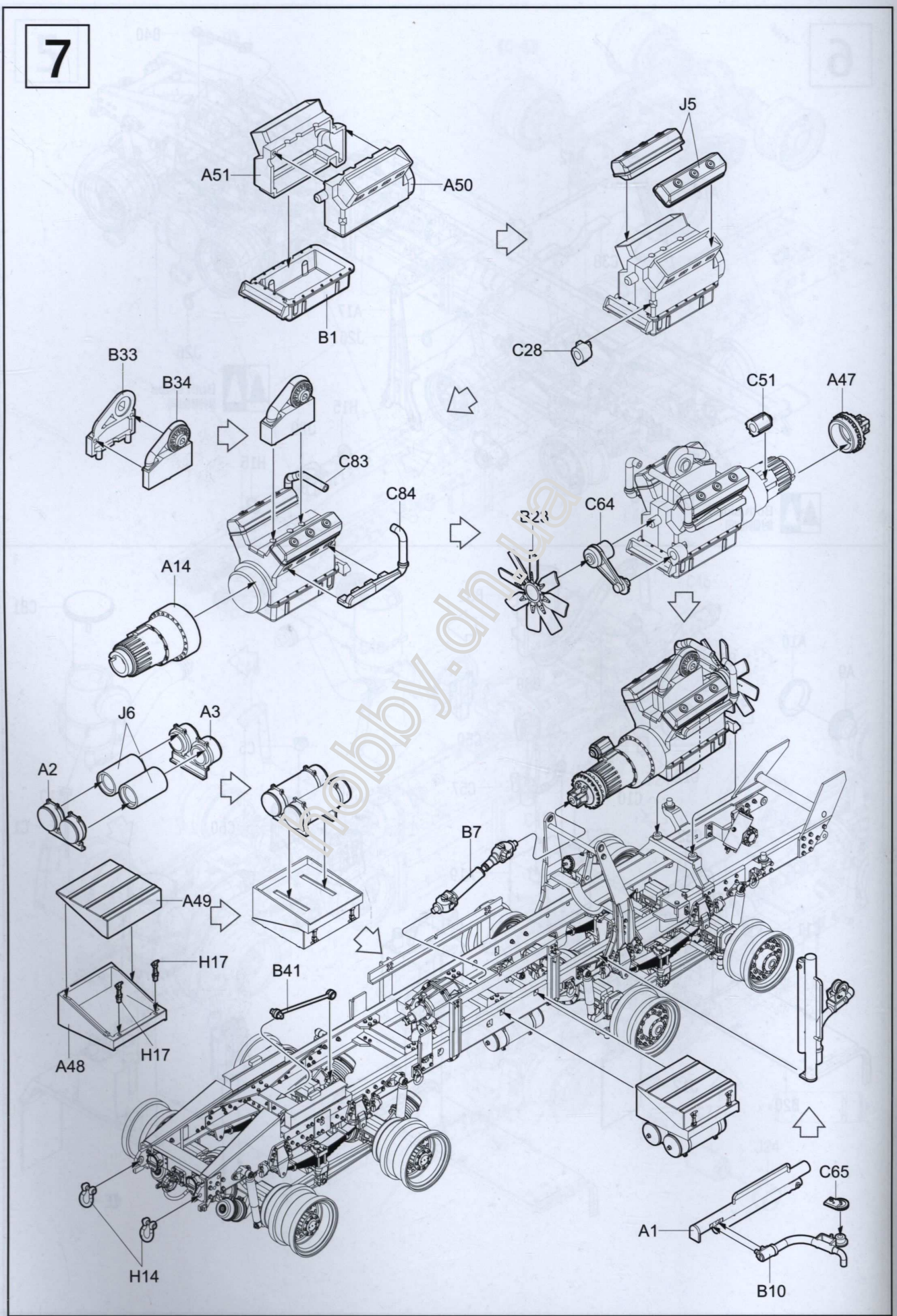
A51
A50
B1
J5
C28
B33
B34
C83
C84
A14
C51
A47
C64
J6
A3
A2
A49
H17
A48
H17
B7
B41
H14
C65
A1
B10

hobby.dn.ua

8

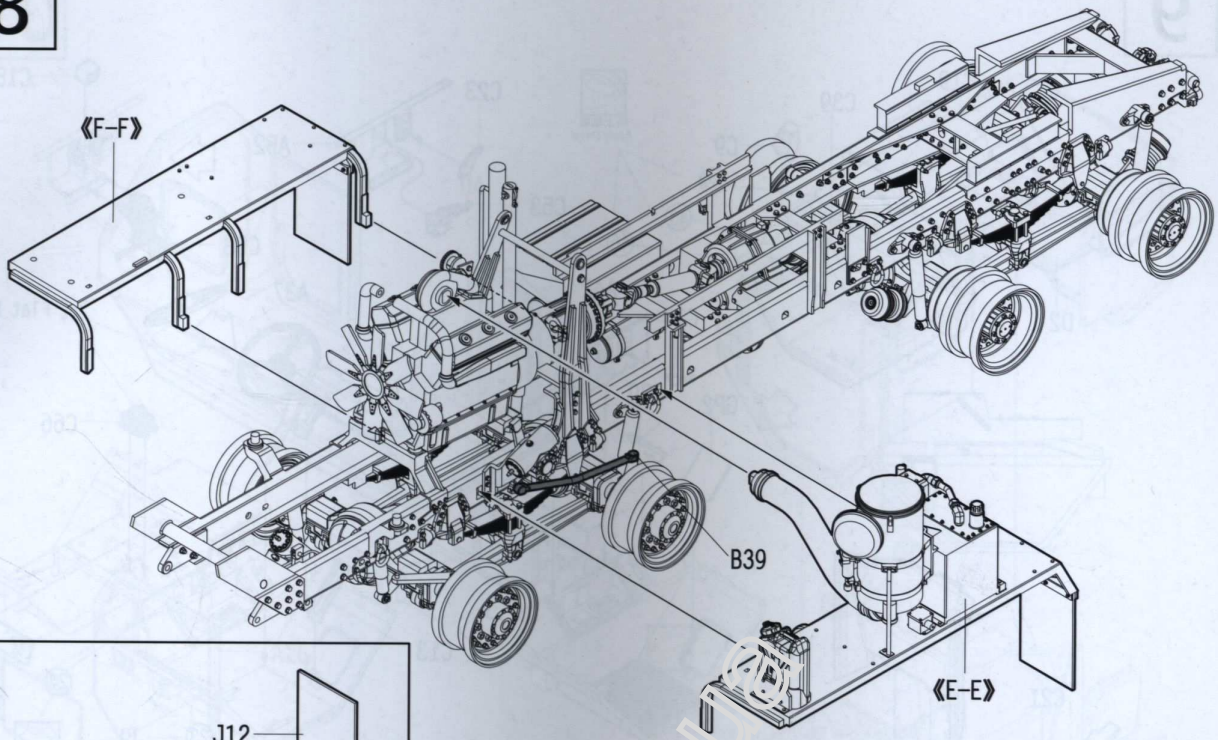

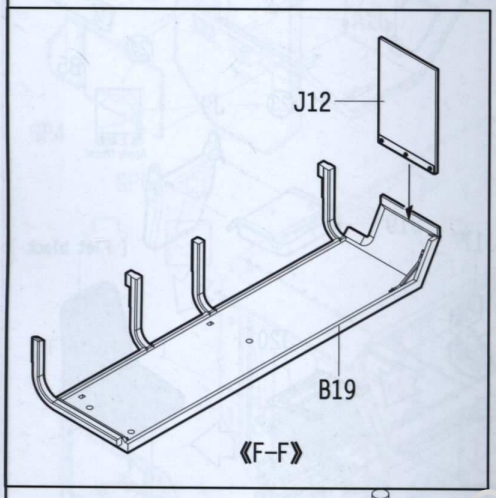

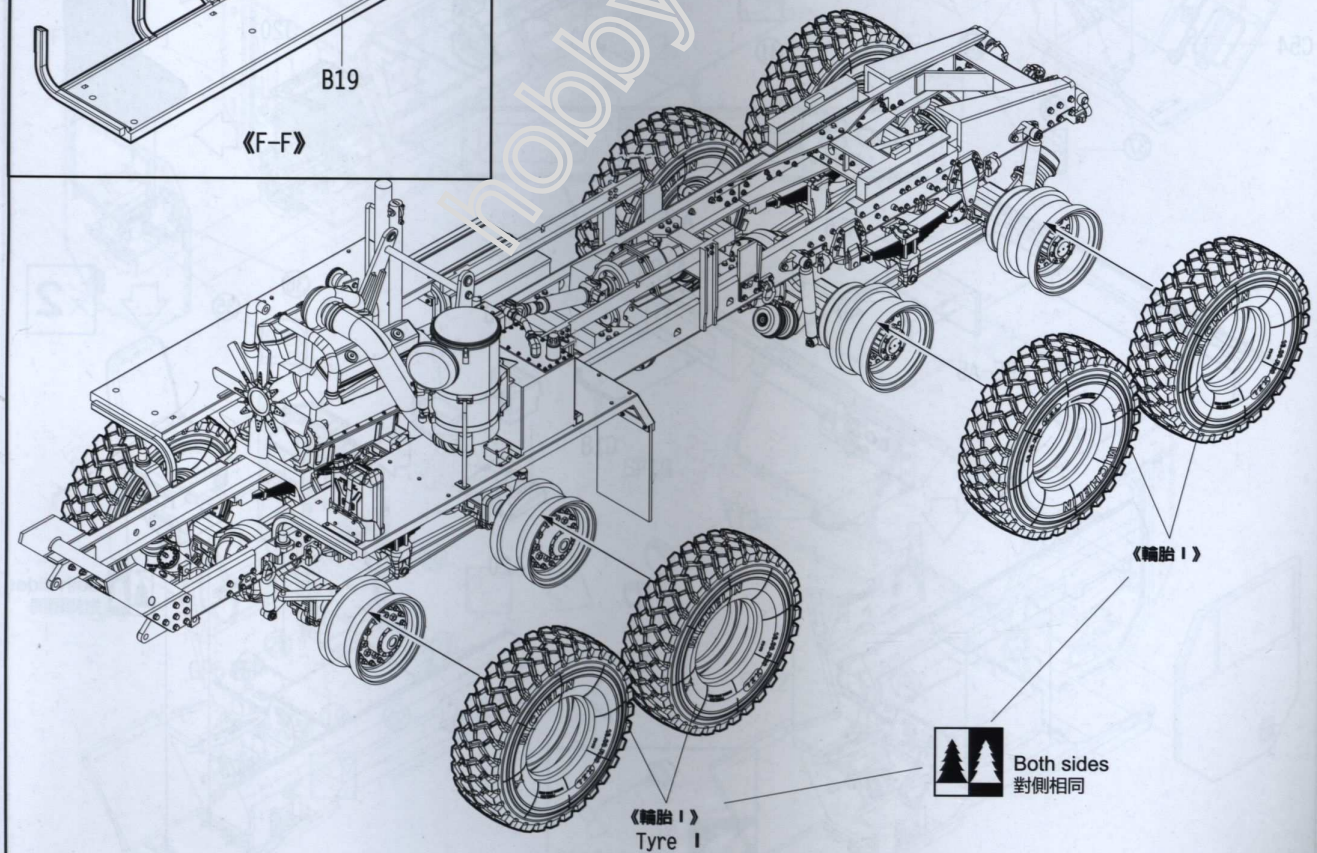

hobby.dn.ua

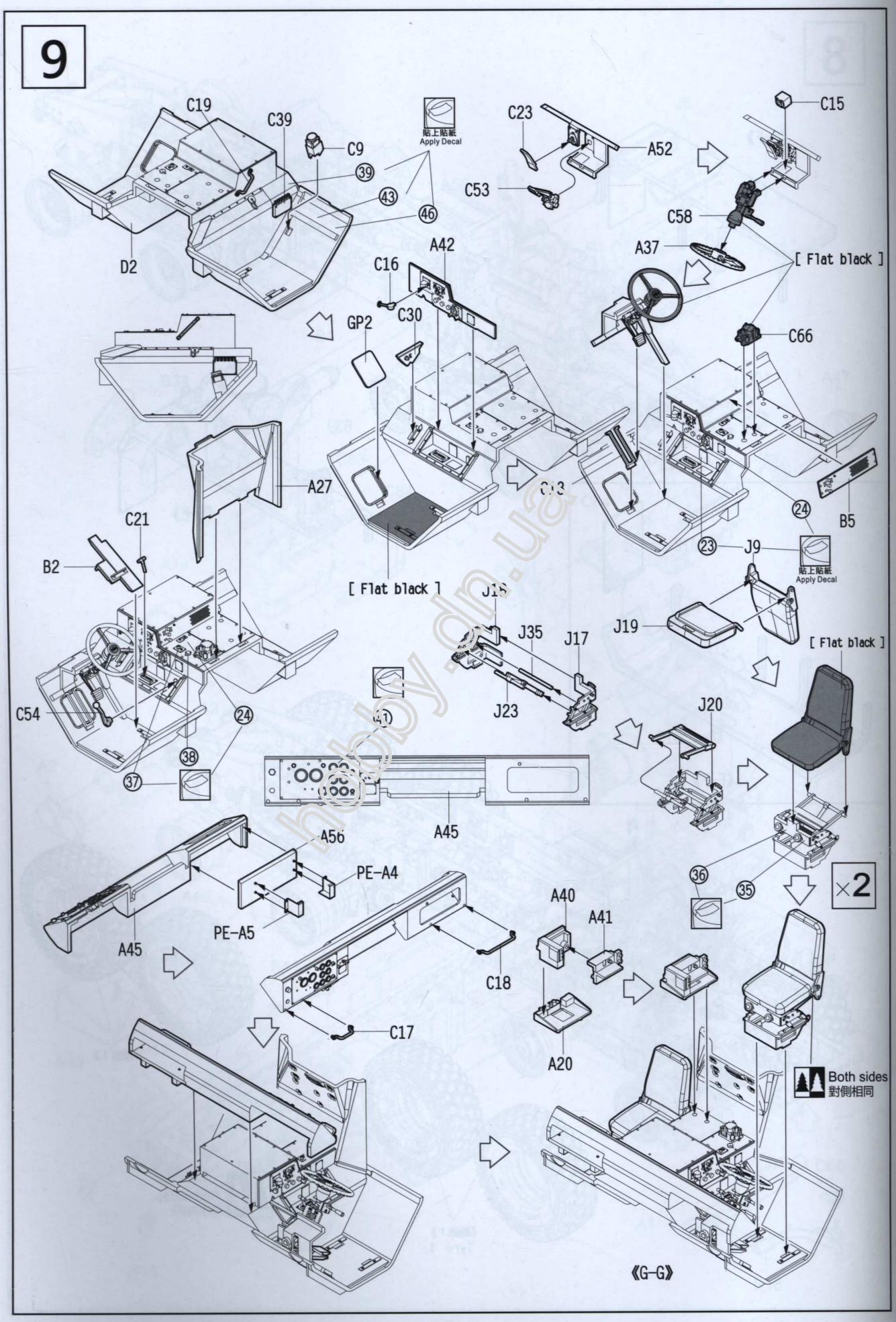
9
C19
C39
C9
39
43
46
D2
貼上貼紙
Apply Decal
C23
A52
C53
C15
C58
A37
[Flat black]
A42
C16
C30
GP2
C66
A27
C13
24
B5
23
J9
貼上貼紙
Apply Decal
C21
B2
[Flat black]
J19
J15
J35
J17
J23
[Flat black]
C54
24
38
37
41
J20
A45
A56
PE-A4
PE-A5
A45
36
35
×2
A40
A41
C18
C17
A20
Both sides
對側相同
《G-G》

hoby.dn.ua

10

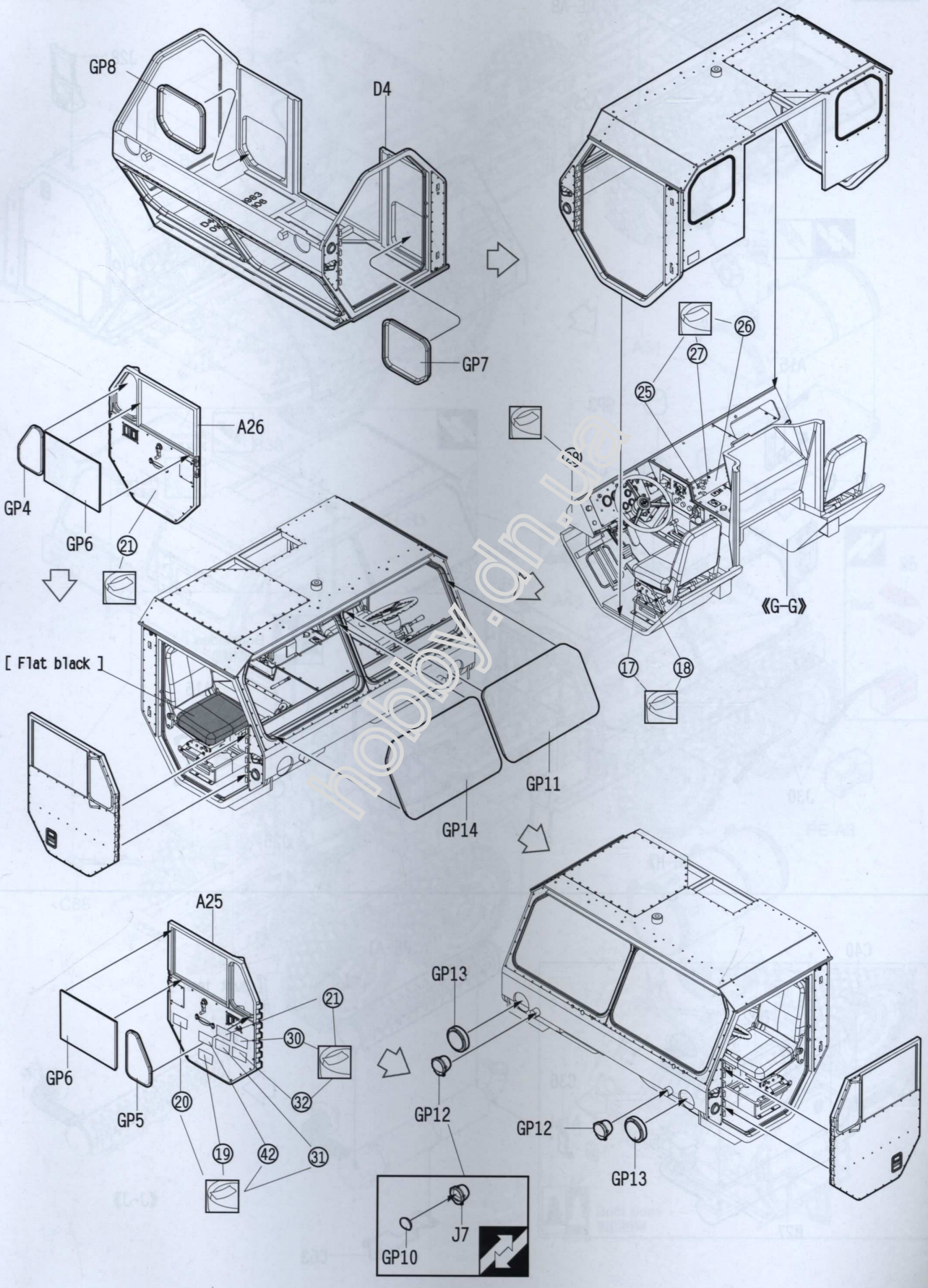

hobby.dn.ua

11

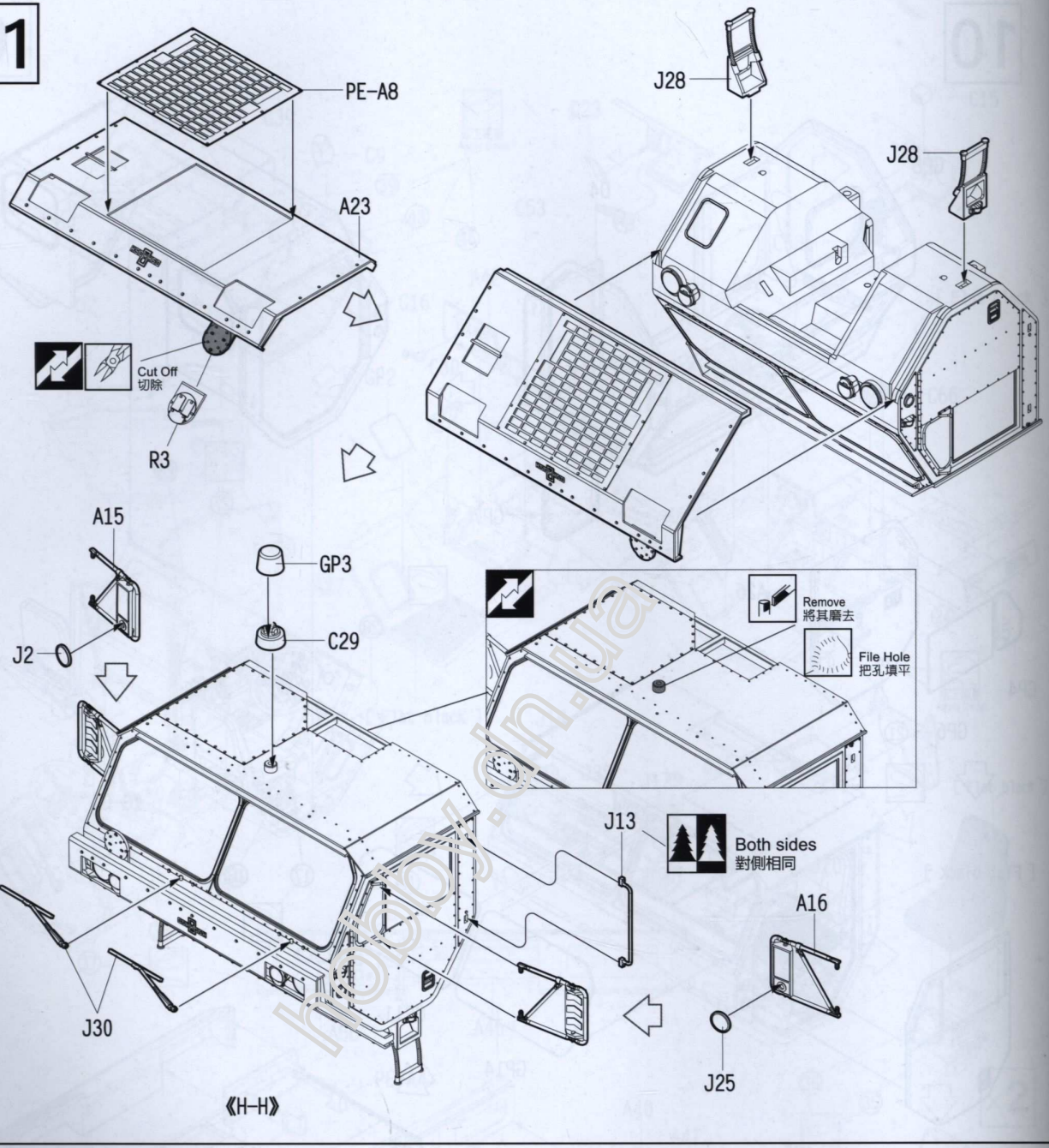
PE-A8
A23
Cut Off
切除
R3
J28
J28
A15
GP3
C29
J2
Remove
將其磨去
File Hole
把孔填平
J13
Both sides
對側相同
A16
J30
J25
《H-H》

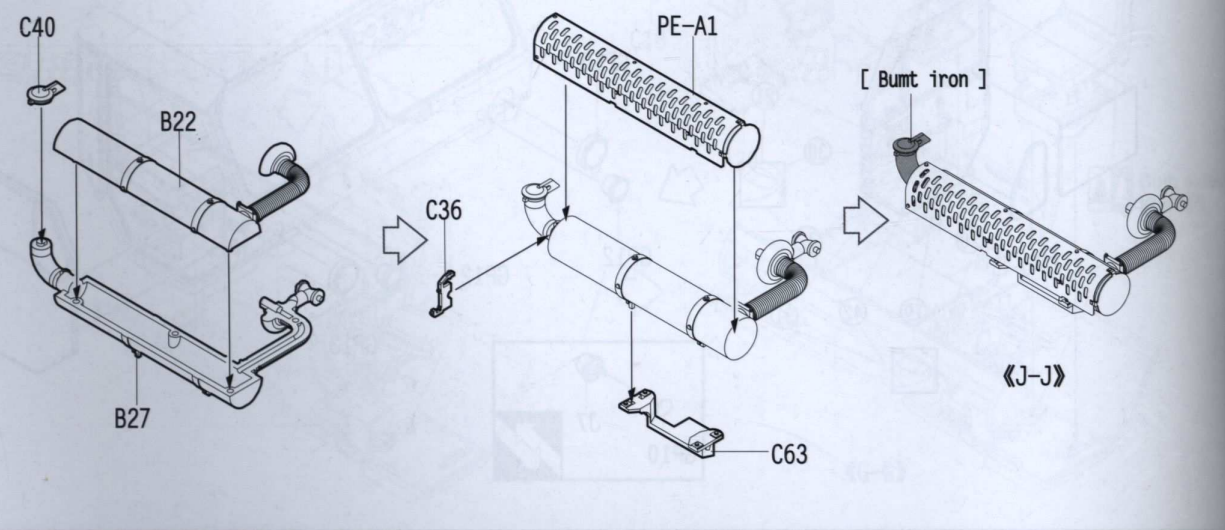
C40
B22
B27
PE-A1
C36
C63
[Bumt iron]
《J-J》

hobby.ua

12

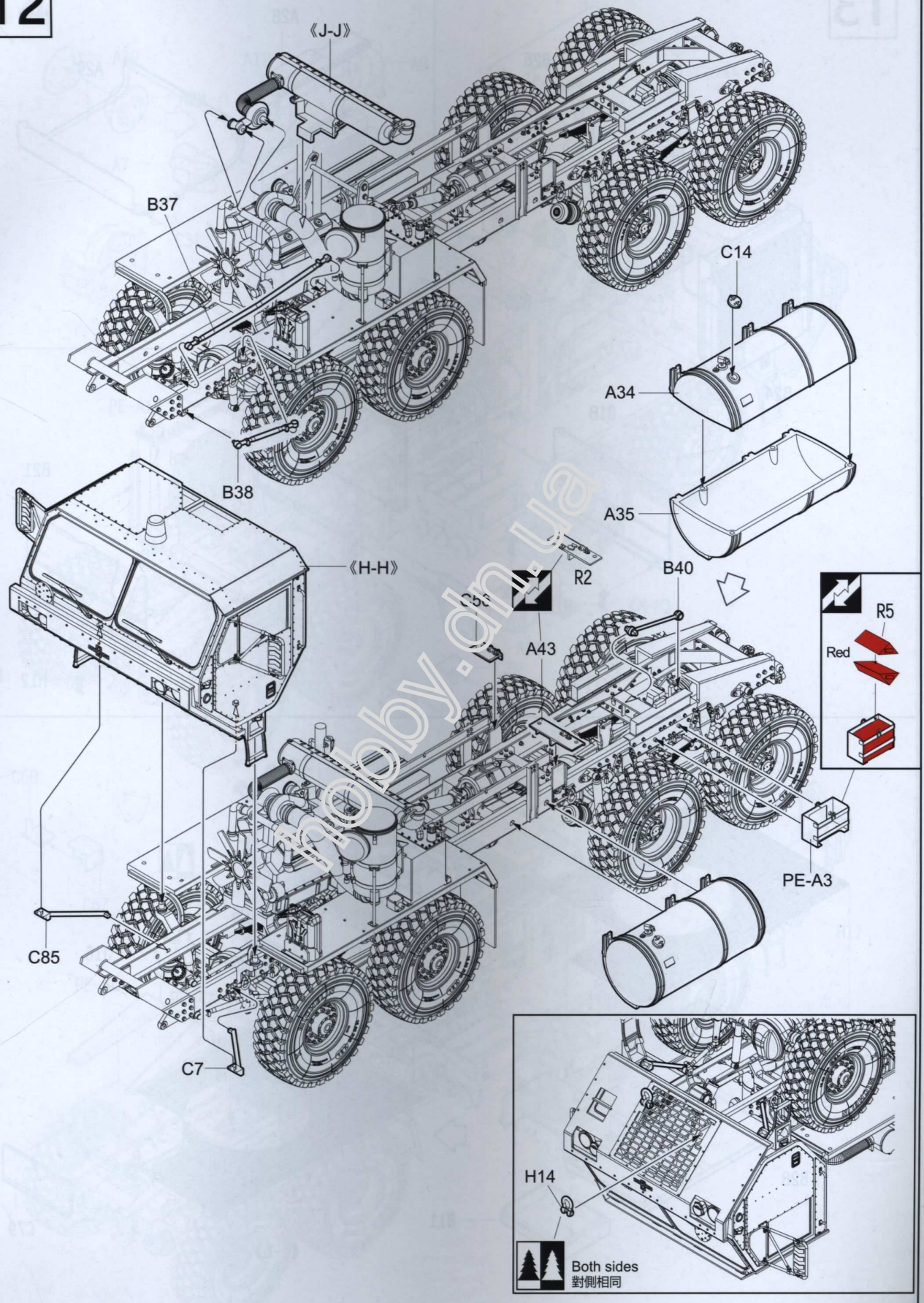

hobby.dn.ua

13

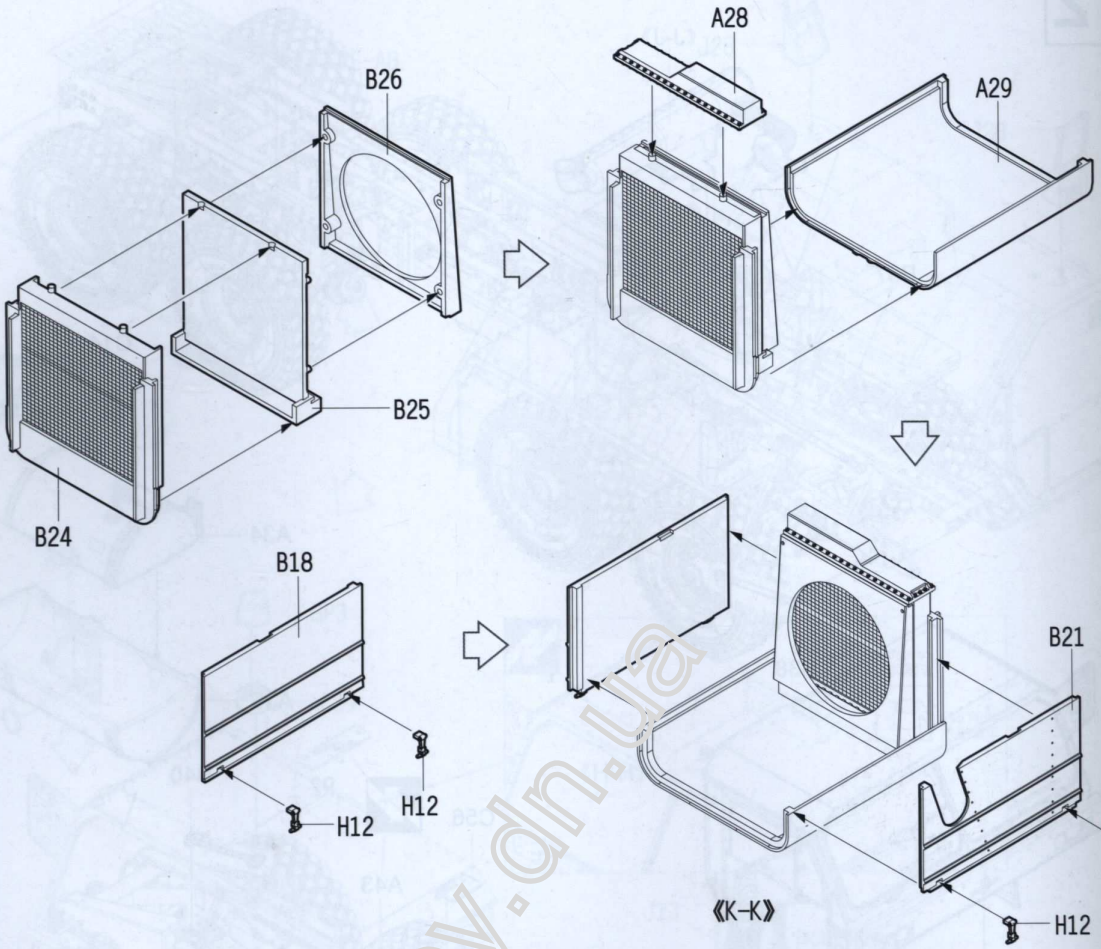

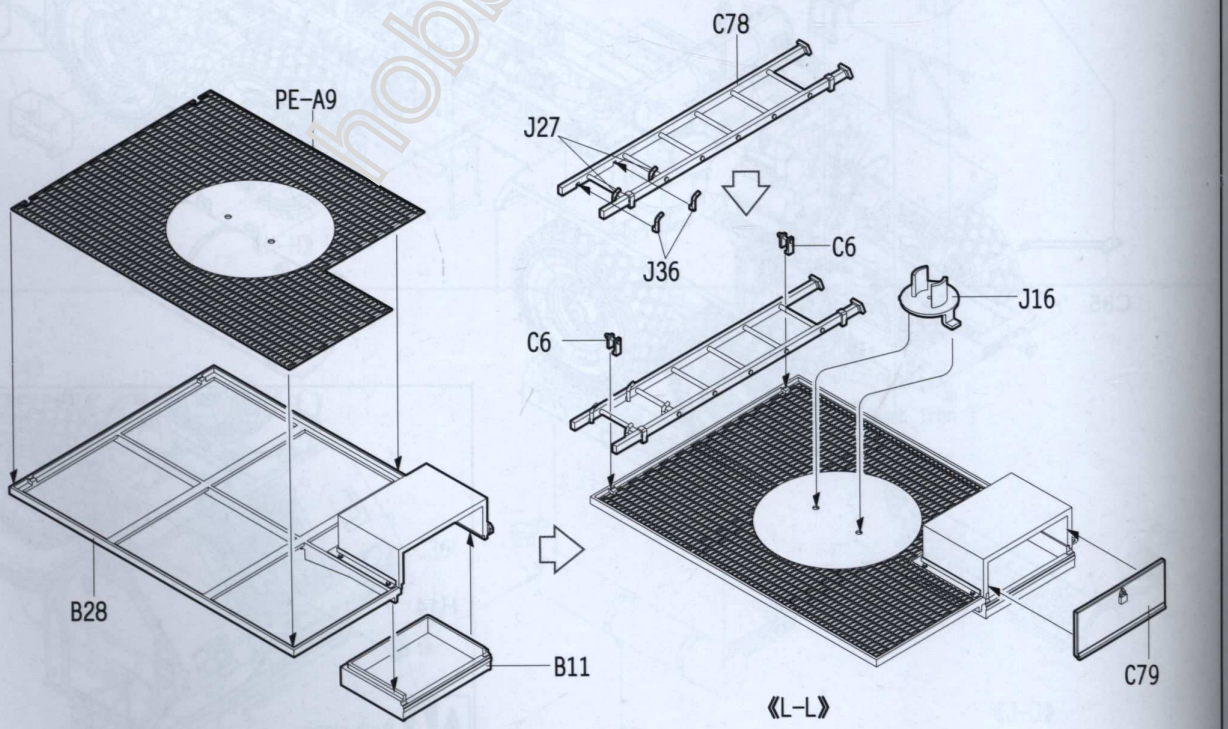

hobby.dn.ua

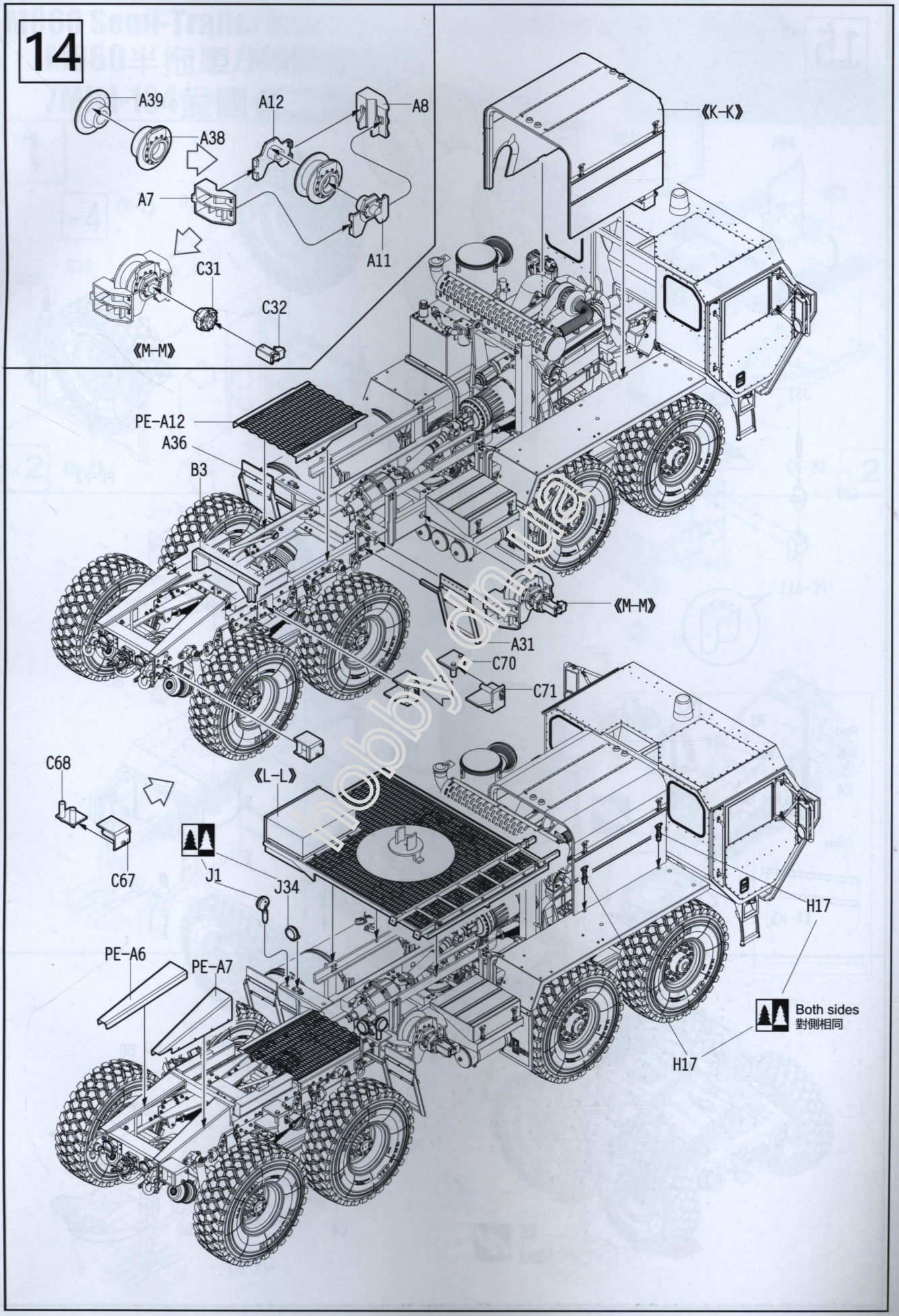
14
A39
A38
A12
A8
A7
A11
C31
C32
《M-M》
《K-K》
PE-A12
A36
B3
《M-M》
A31
C70
C71
C68
《L-L》
C67
J1
J34
H17
PE-A6
PE-A7
Both sides
對側相同
H17

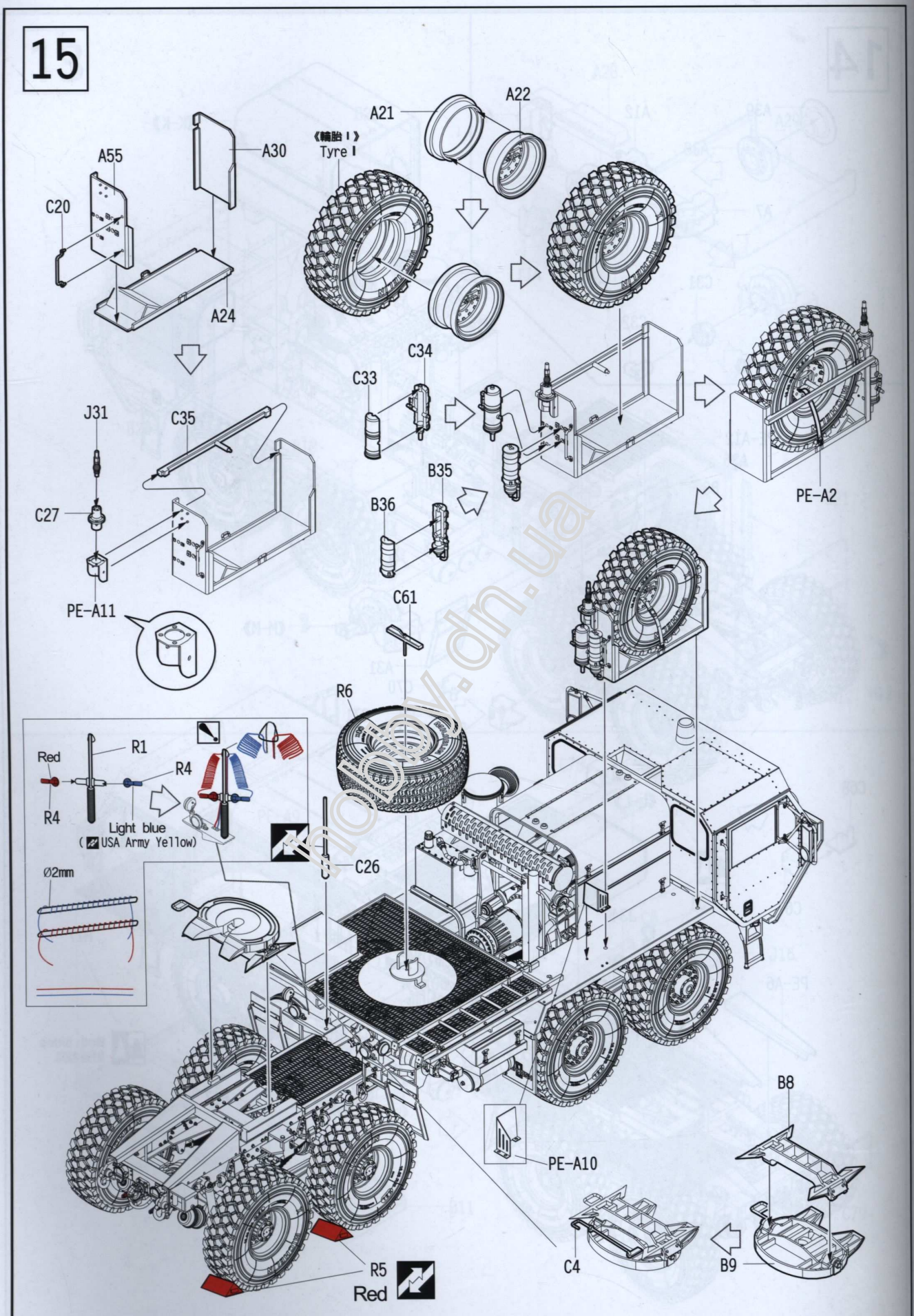
15
A21
A22
A30
A55
C20
A24
《輪胎 I》
Tyre I
C34
C33
J31
C35
C27
B35
B36
PE-A2
PE-A11
C61
R6
Red
R1
R4
R4
Light blue
(USA Army Yellow)
Ø2mm
C26
PE-A10
B8
C4
B9
R5
Red

modely.dn.ua

M860 Semi-Traile/M901 Launching Station of MIM-104
M860半拖車/M901發射箱
/MIM-104愛國者二型防空飛彈

1

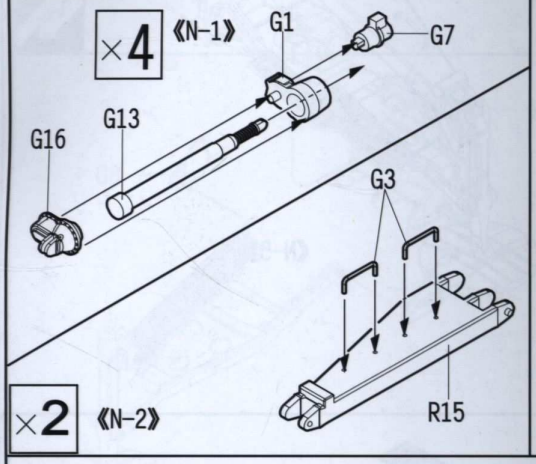

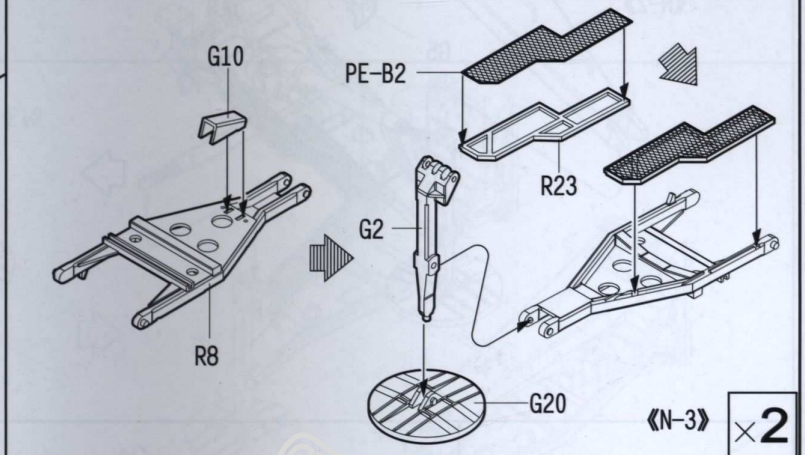

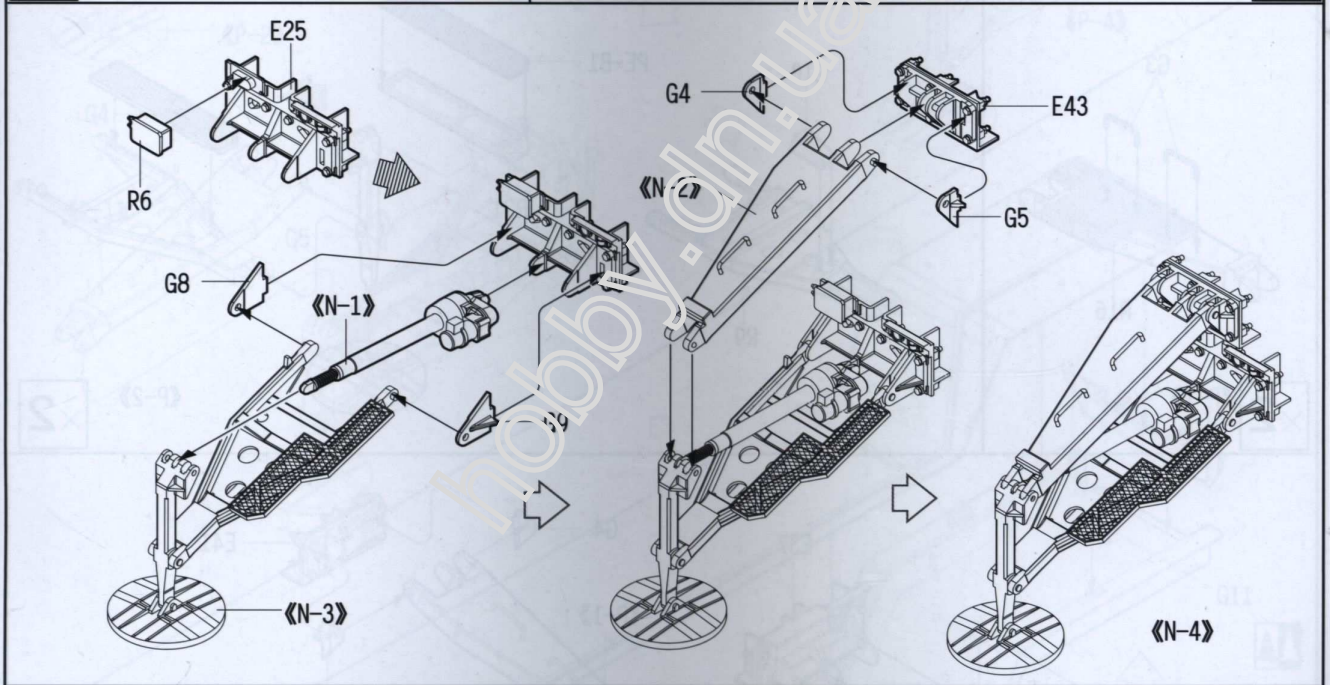

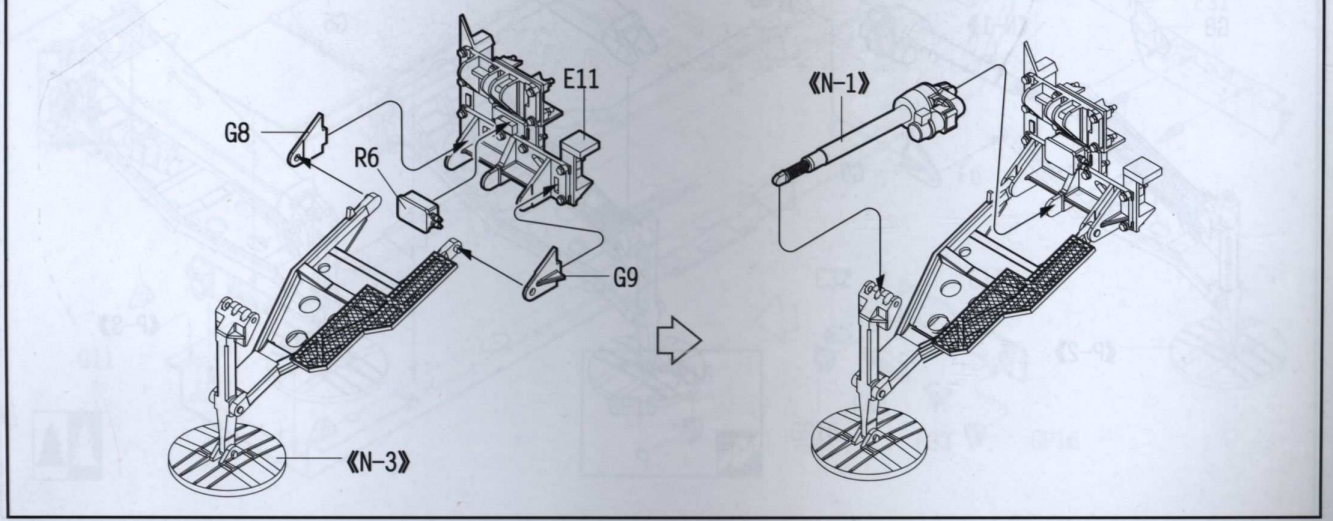

hobby.dn.ua

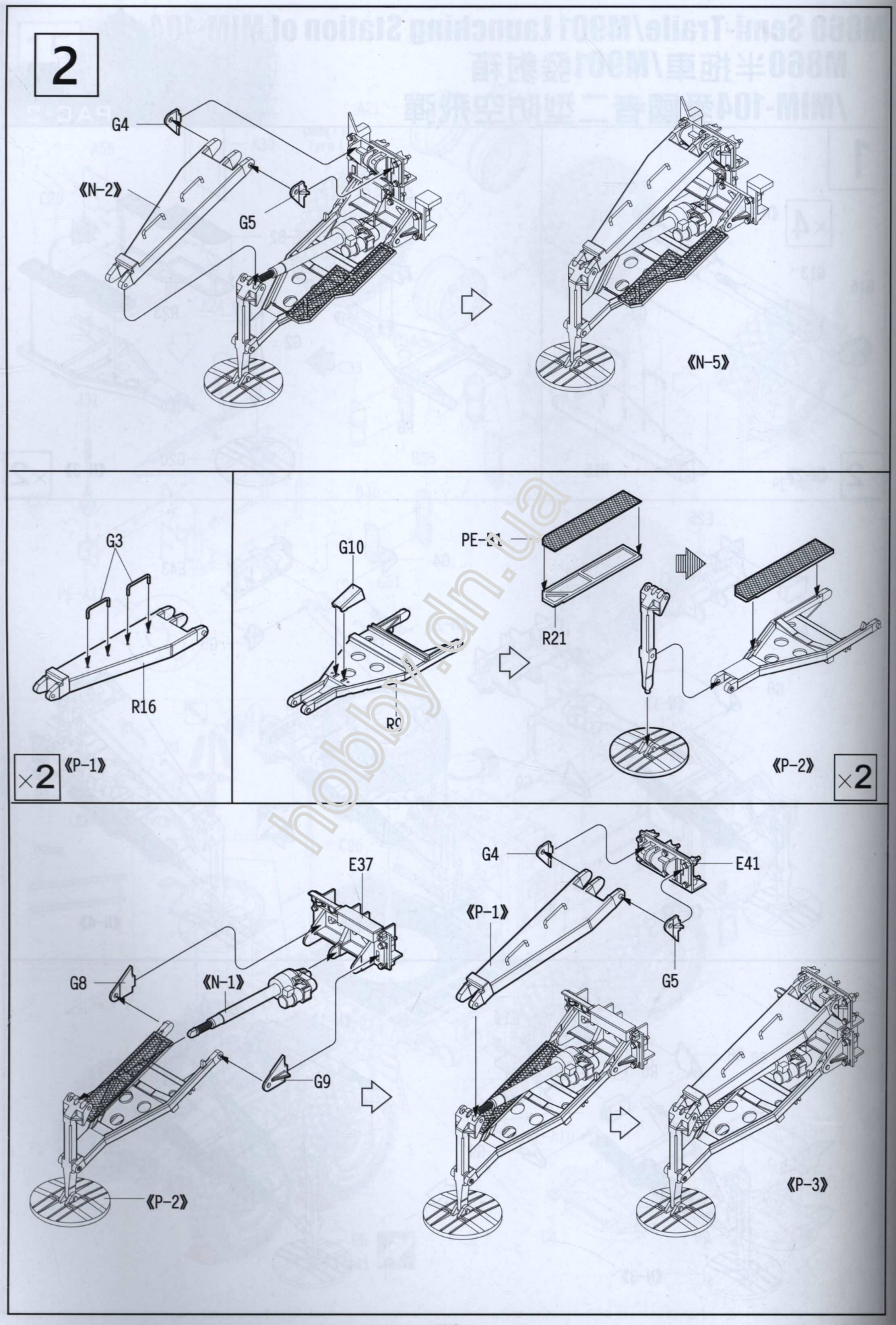
2
G4
《N-2》
G5
《N-5》
G3
R16
×2
《P-1》
G10
PE-B1
R21
R9
《P-2》
×2
E37
G8
《N-1》
G9
《P-2》
G4
E41
《P-1》
G5
《P-3》

hobby.dn.ua

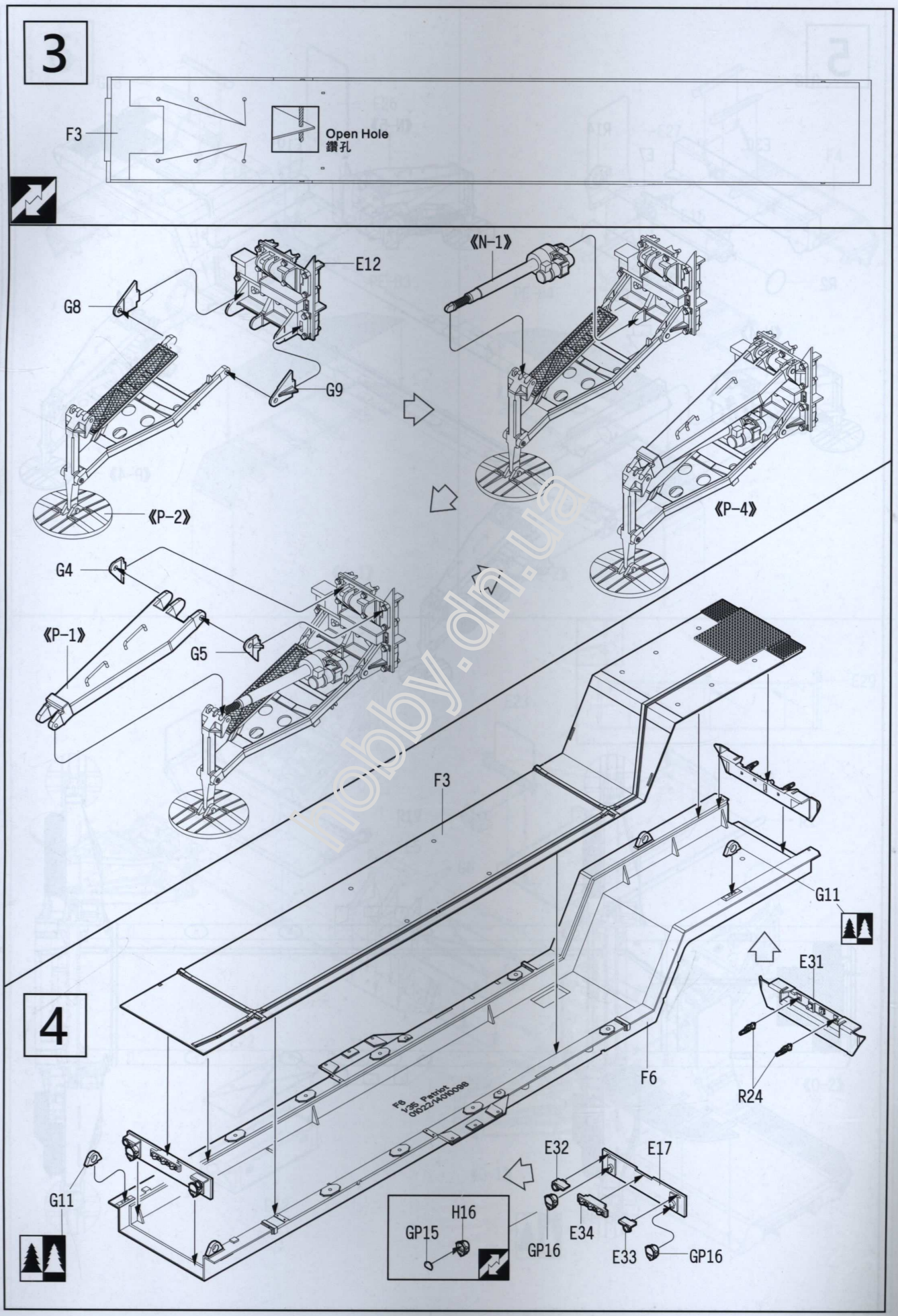
3
F3
Open Hole
鑽孔
E12
G8
G9
《N-1》
《P-2》
《P-4》
G4
《P-1》
G5
F3
G11
E31
R24
F6
4
G11
E32
E17
H16
GP15
GP16
E34
E33
GP16

hobby.dn.ua

5

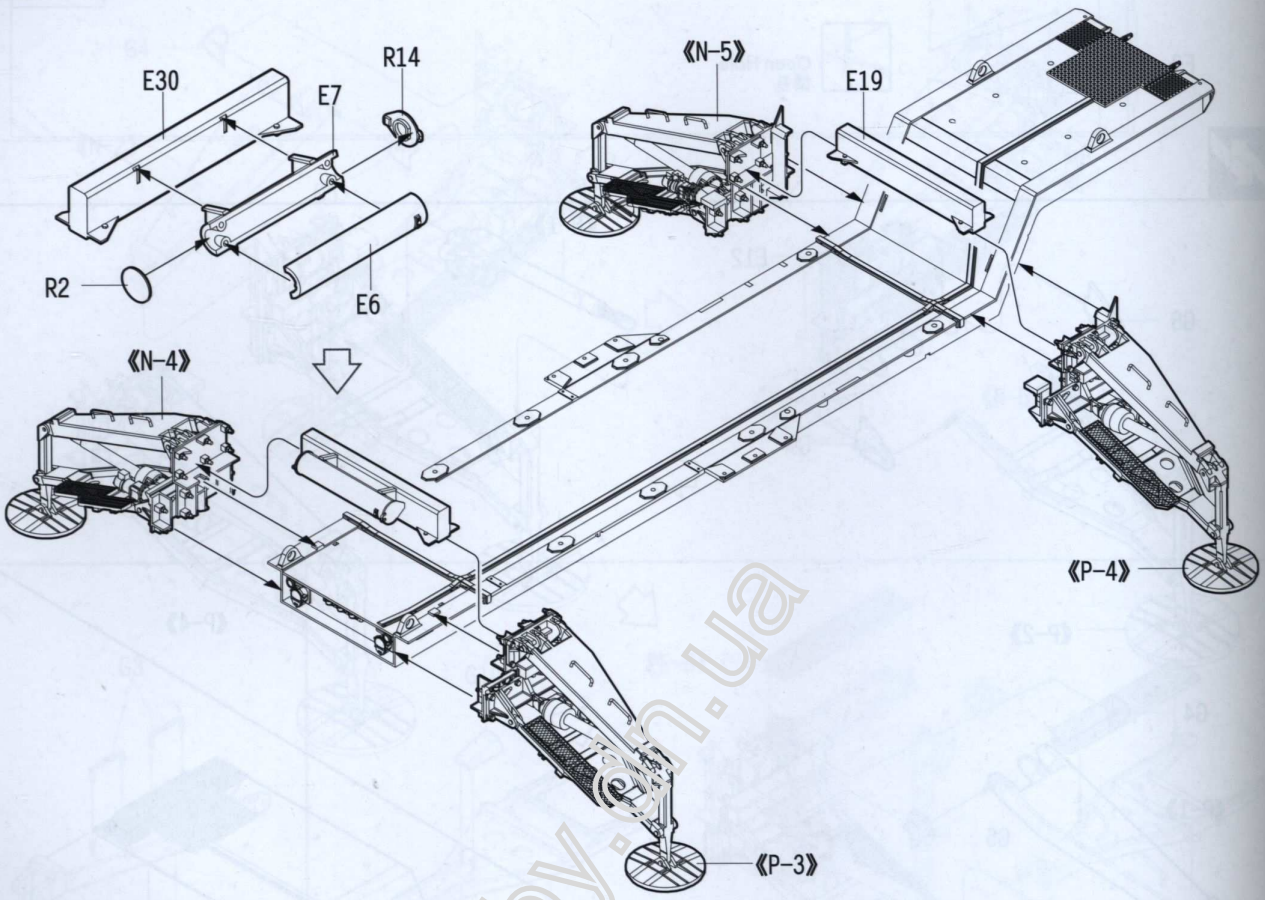

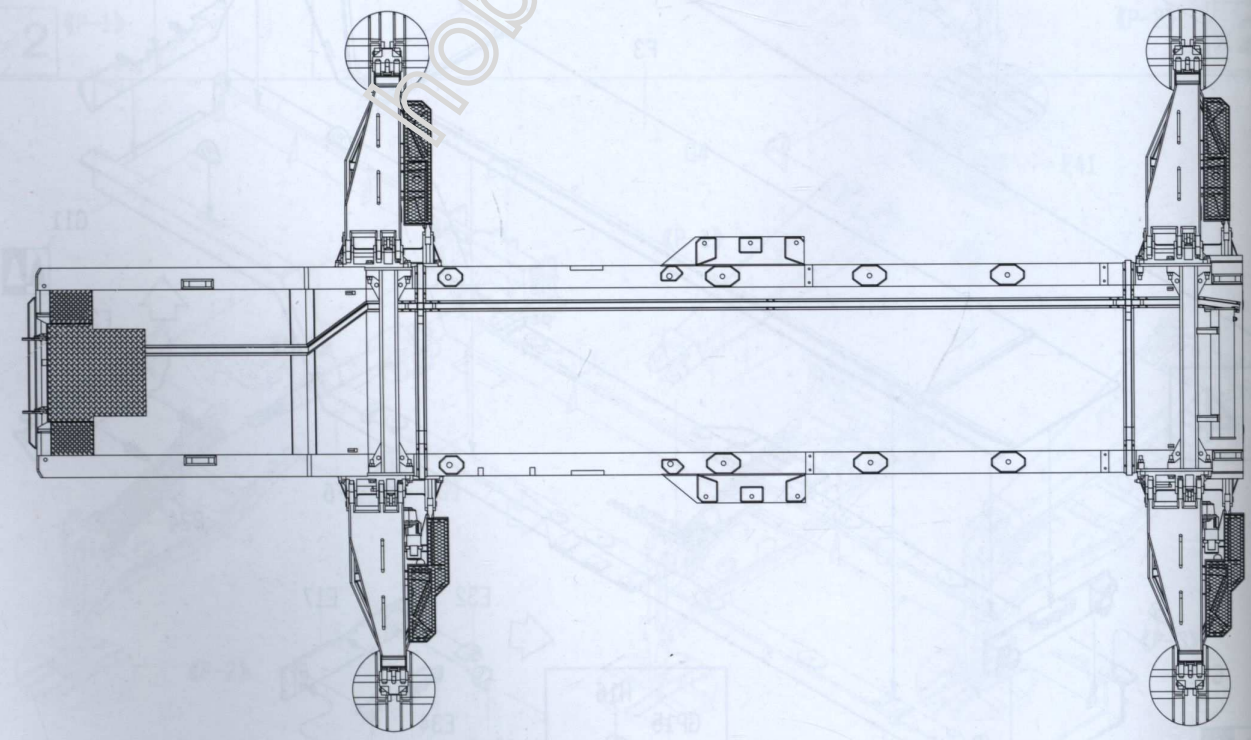

hobby.in.ua

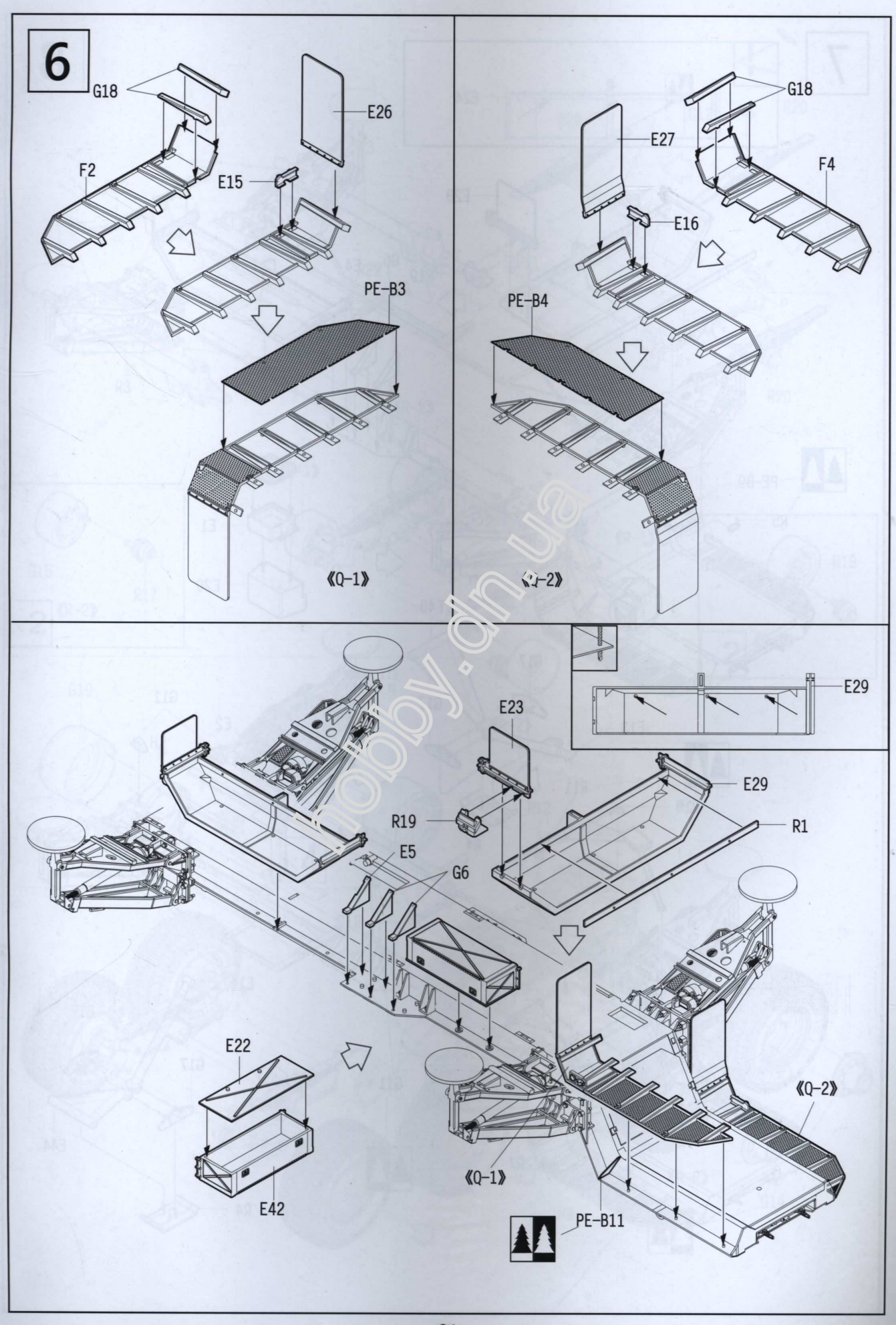
6
G18
E26
F2
E15
PE-B3
《Q-1》
G18
E27
F4
E16
PE-B4
《Q-2》
E29
E23
E29
R19
R1
E5
G6
E22
《Q-2》
《Q-1》
E42
PE-B11

hobby.dn.ua

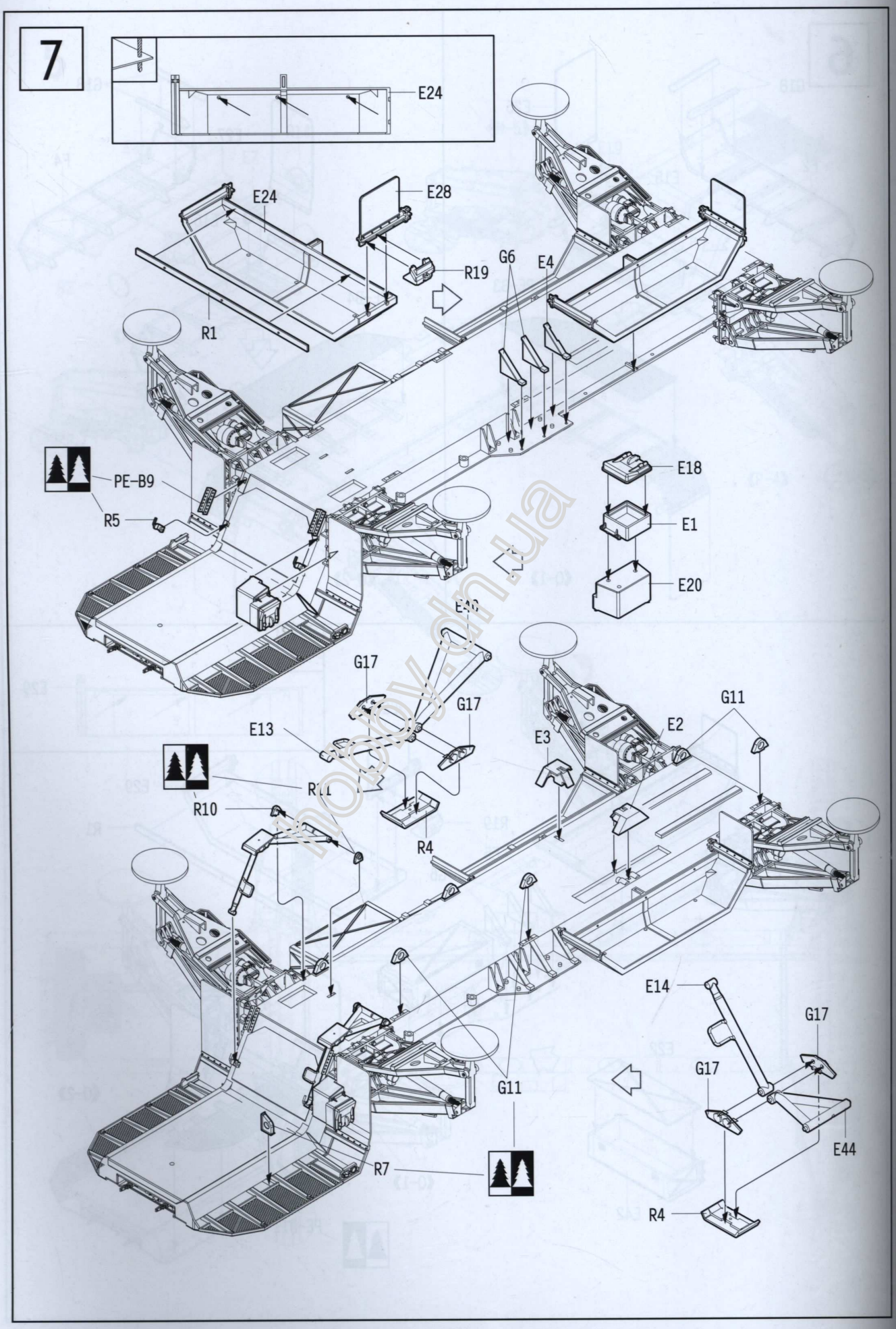
7
E24
E24
E28
R19
G6
E4
R1
PE-B9
R5
E18
E1
E20
G17
G17
E13
G11
E2
E3
R11
R10
R4
E14
G17
G17
G11
E44
R7
R4

8

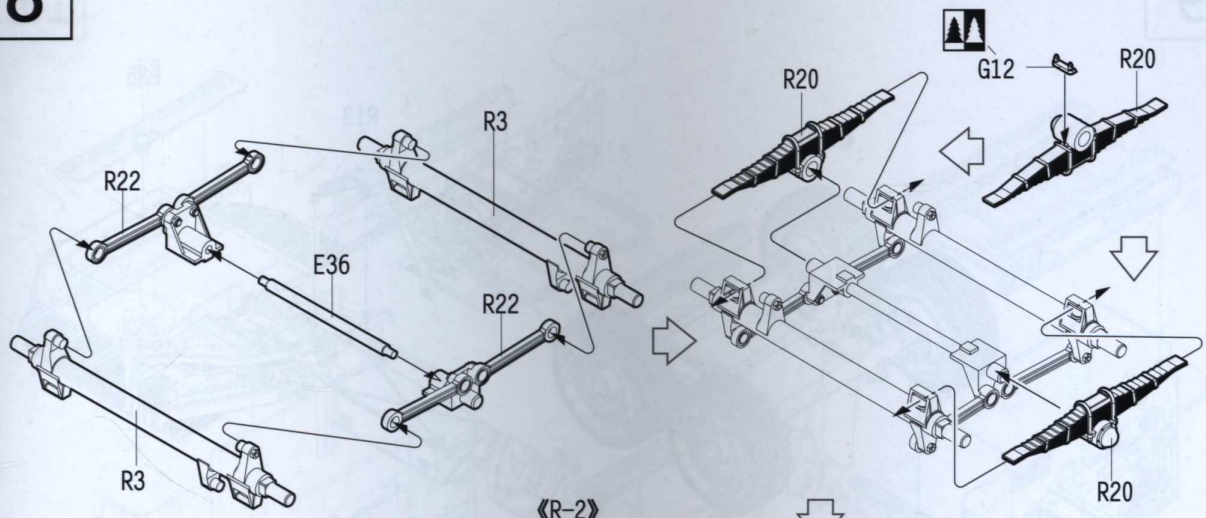
R22
R3
E36
R22
R3
R20
G12
R20
R20

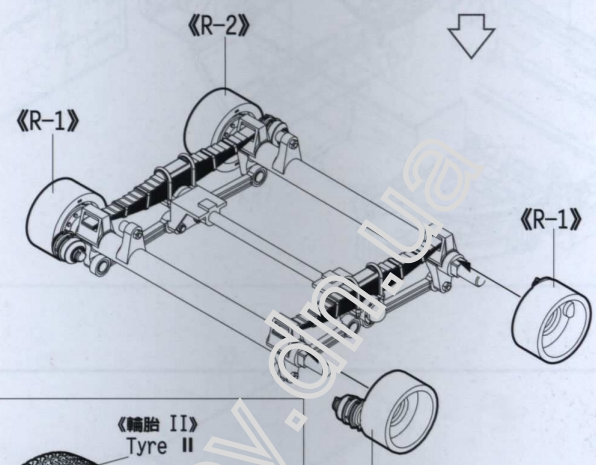
《R-2》
《R-1》
《R-1》
《R-2》

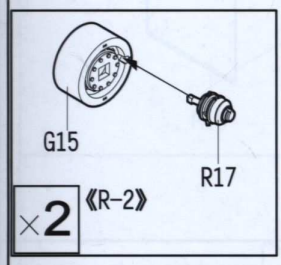
G15
R17
×2
《R-2》

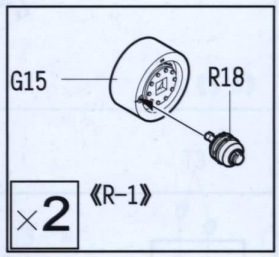
G15
R18
×2
《R-1》

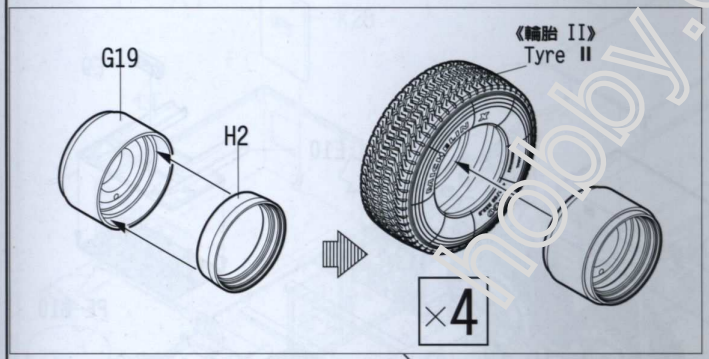
G19
H2
《輪胎 II》
Tyre II
×4

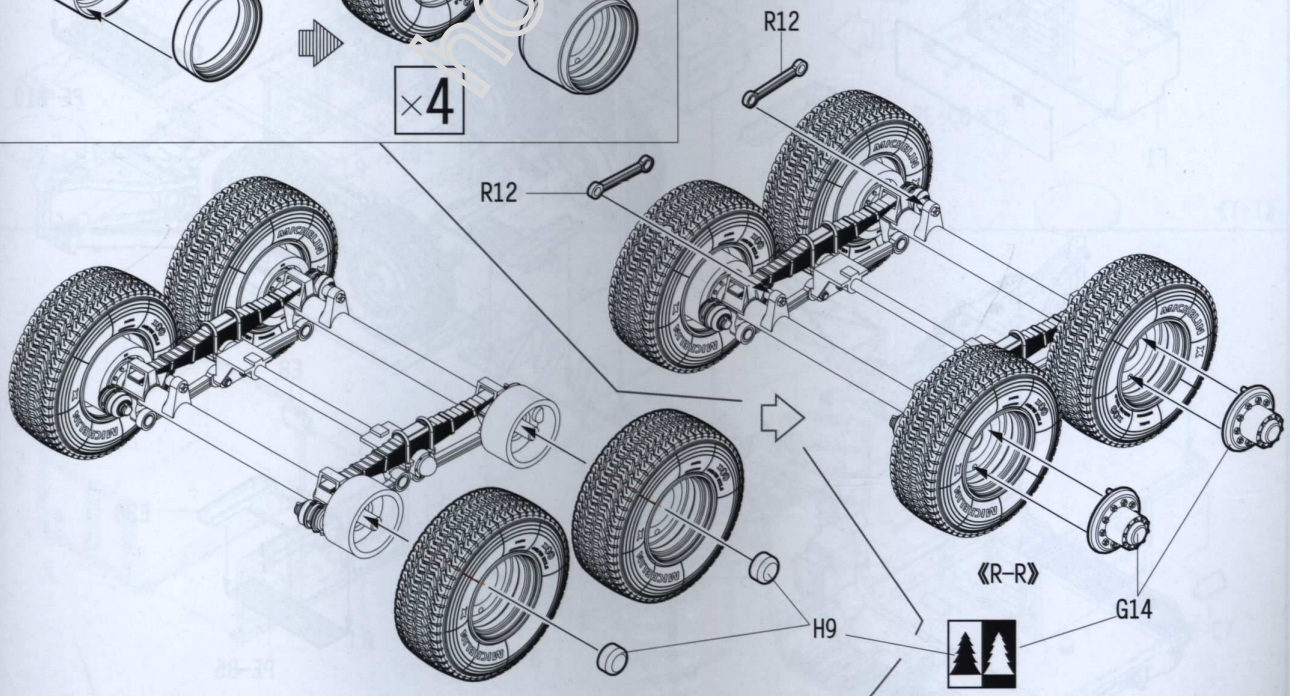
R12
R12
《R-R》
H9
G14

hobby.dn.ua

9

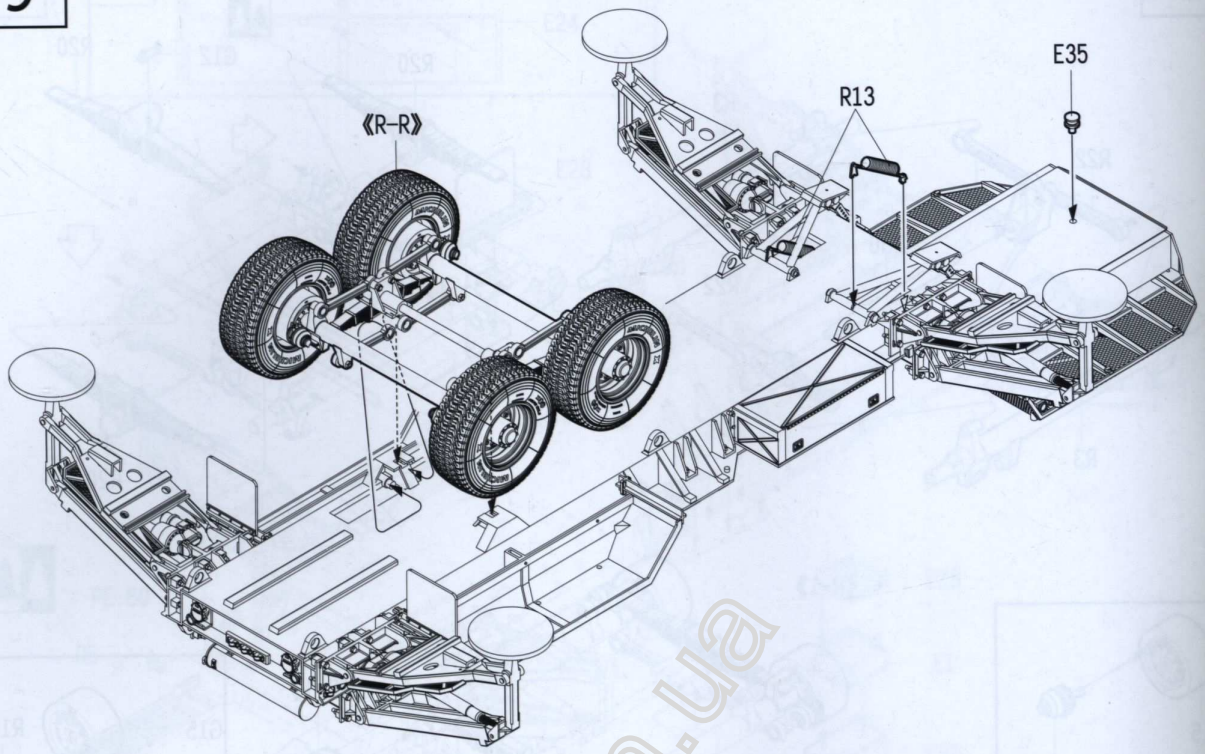

10

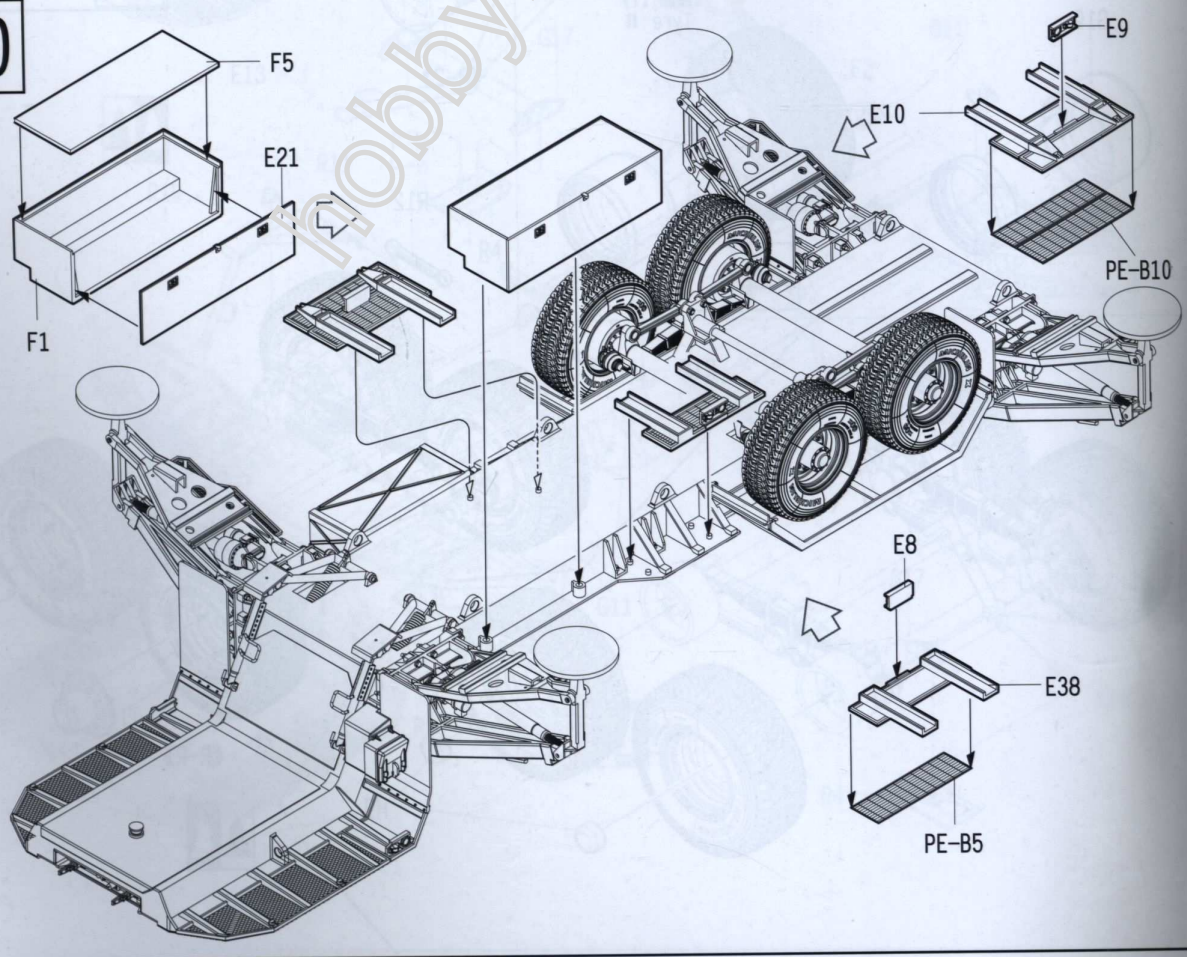

hobby.dn.ua

11

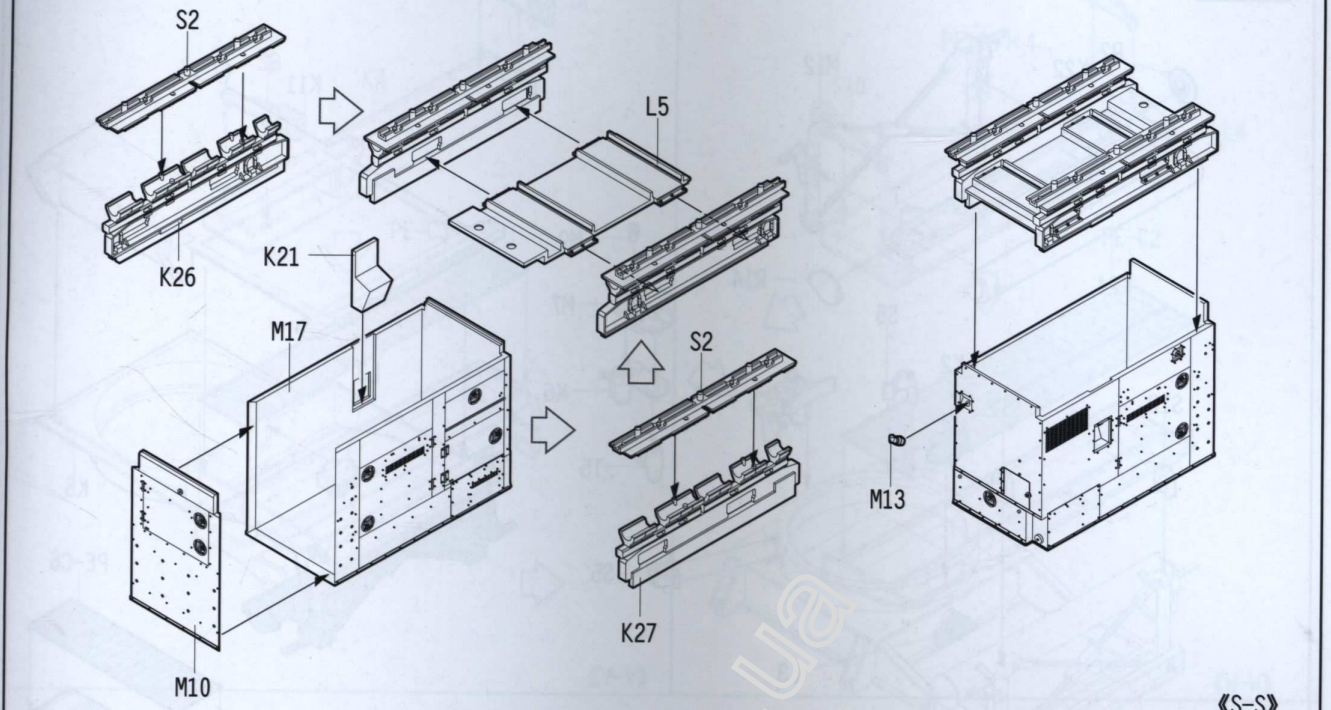

《S-S》

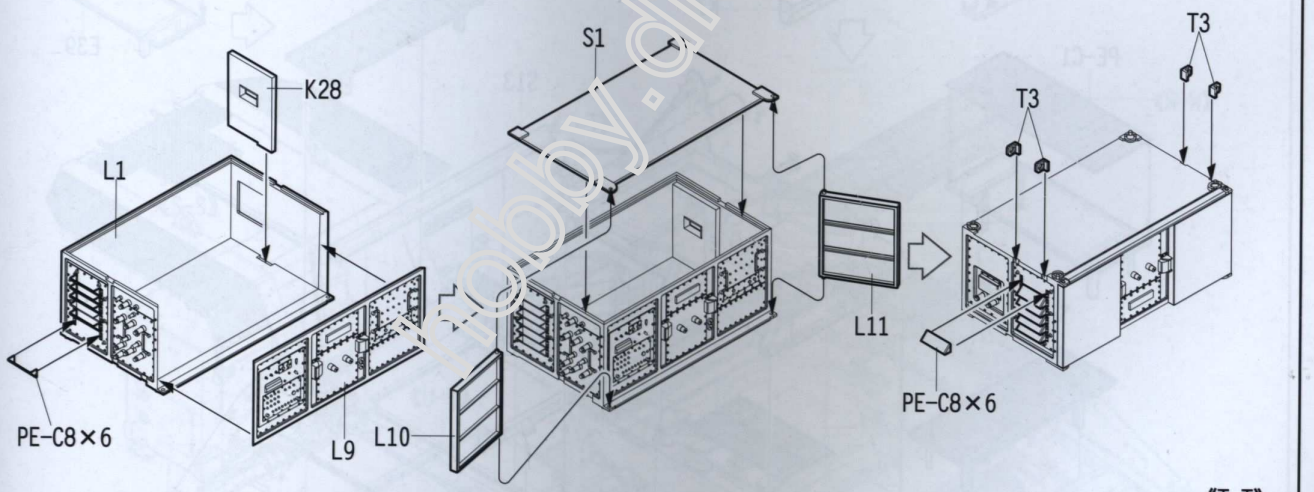

《T-T》

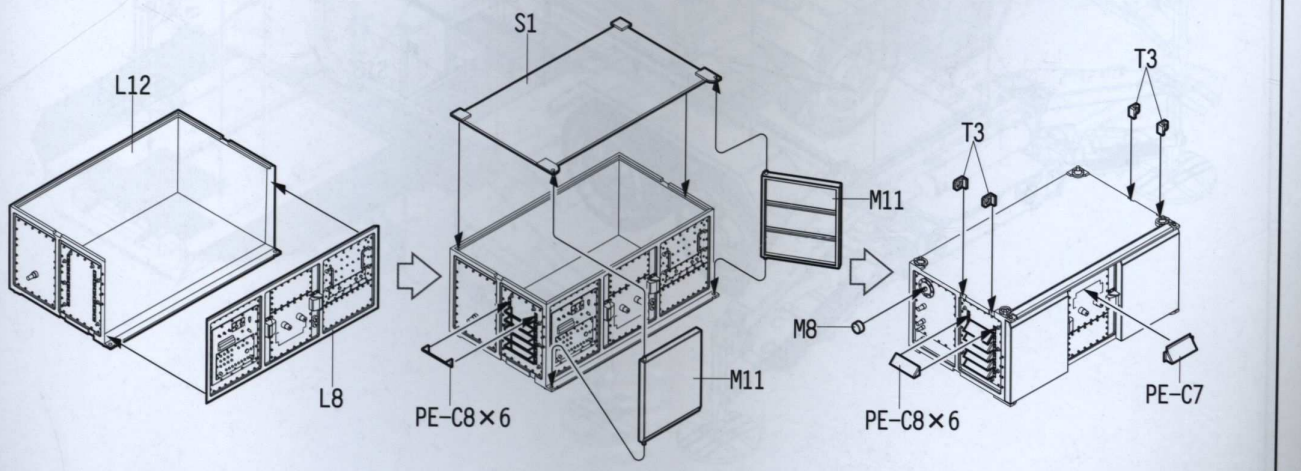

《U-U》

hobby.dn.ua

12

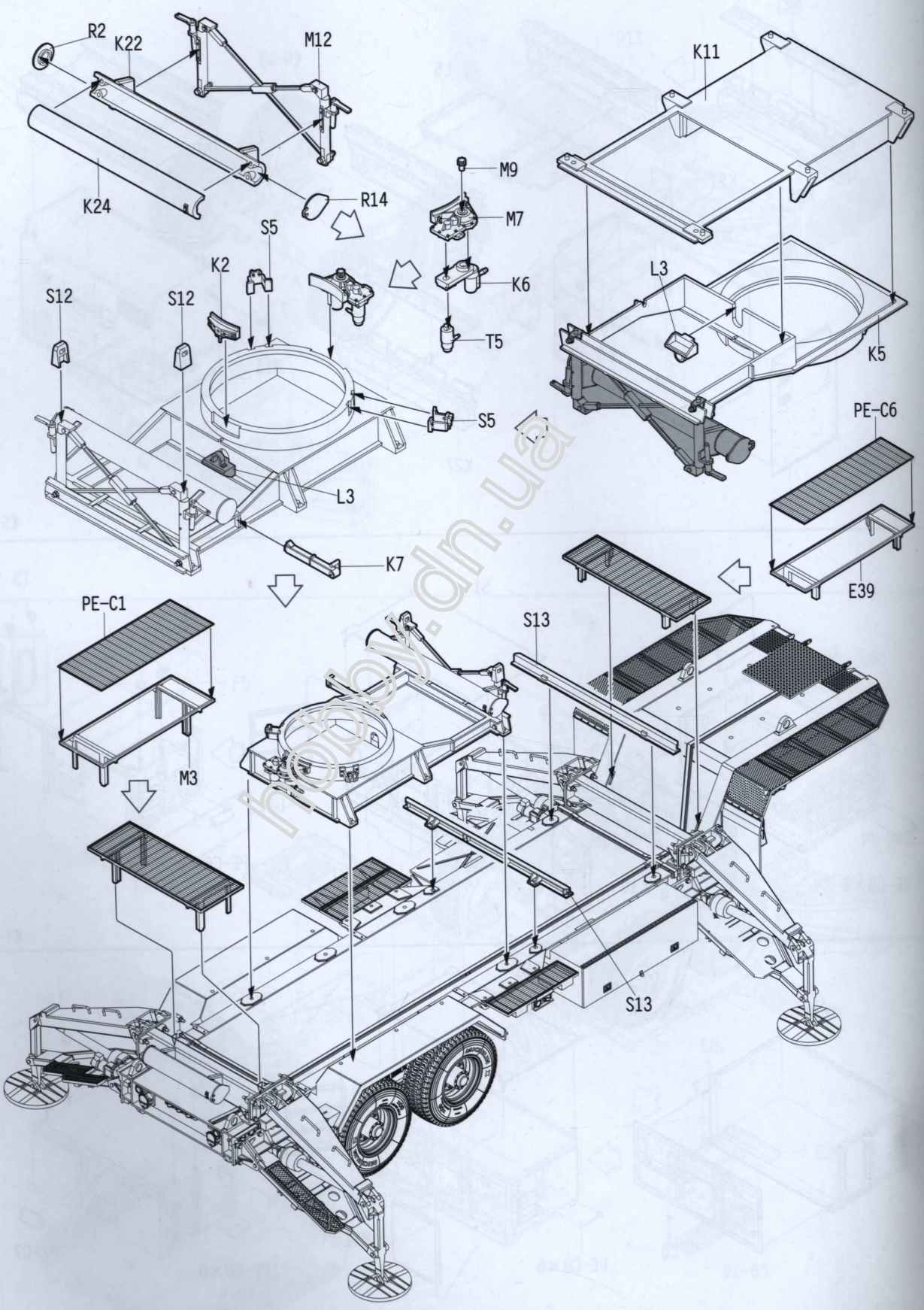

hobby.dn.ua

13

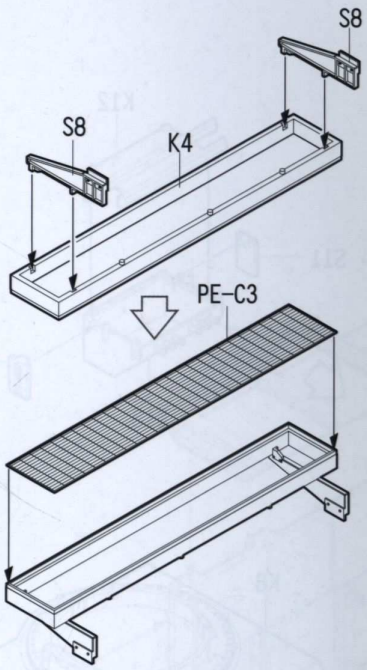

《V-V》

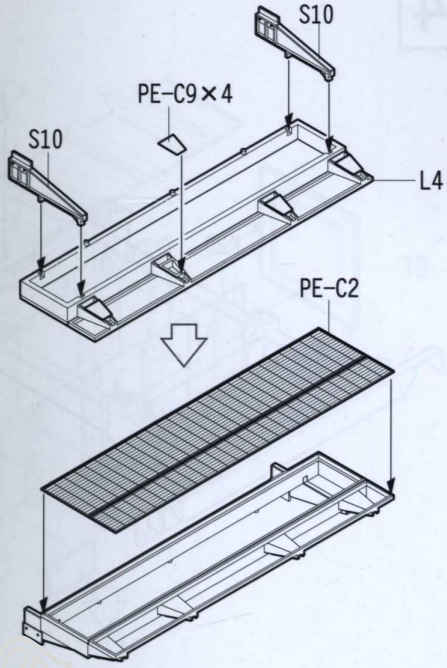

《W-W》

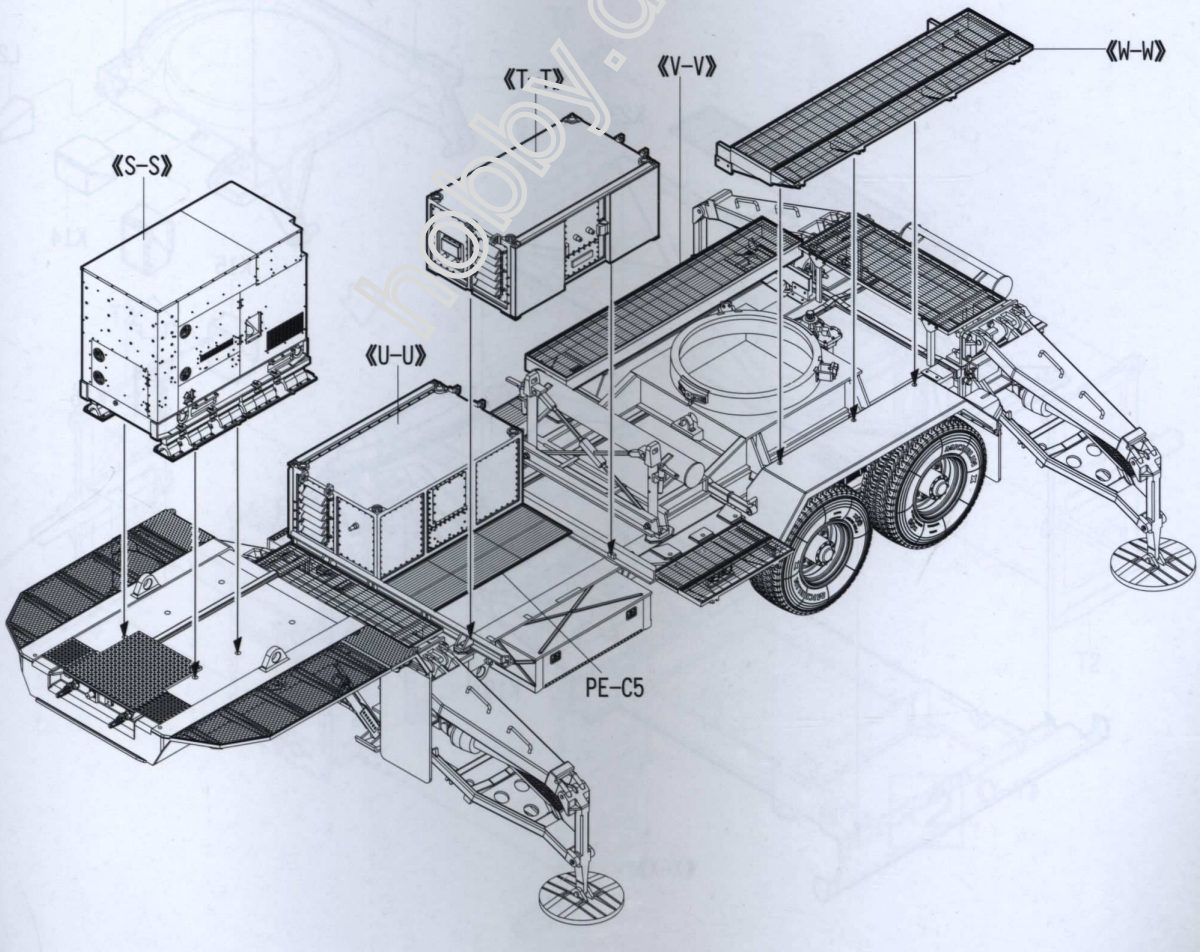

hobby.dn.ua

14

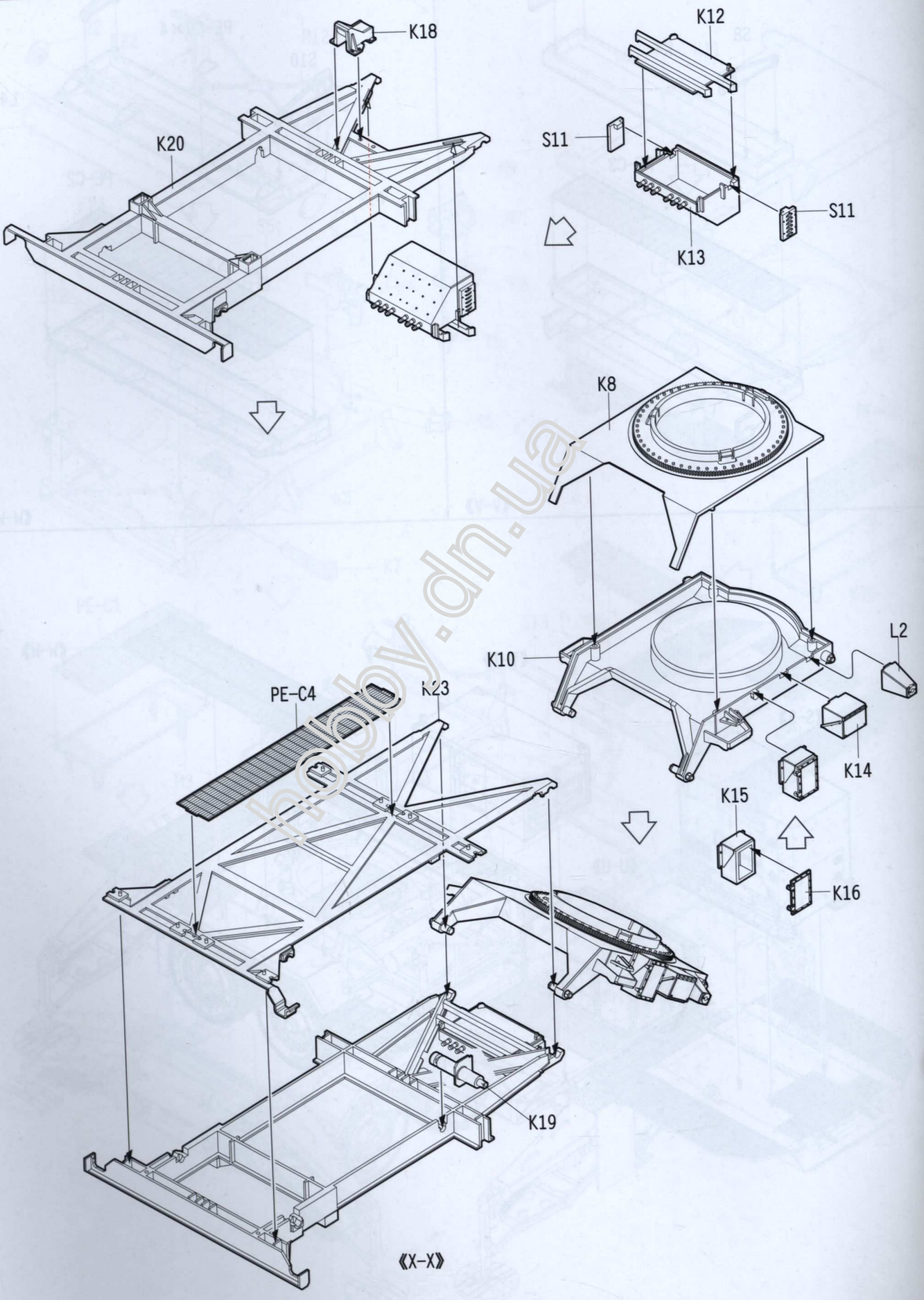

hoby.dn.ua

15

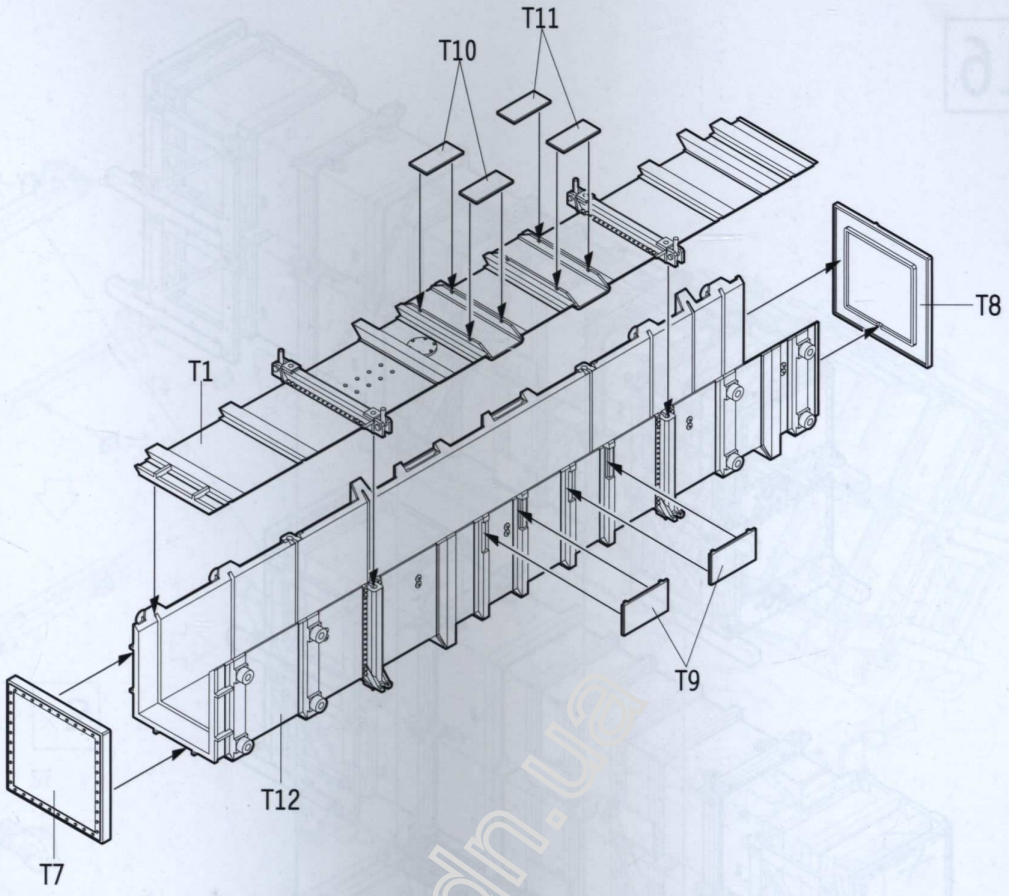

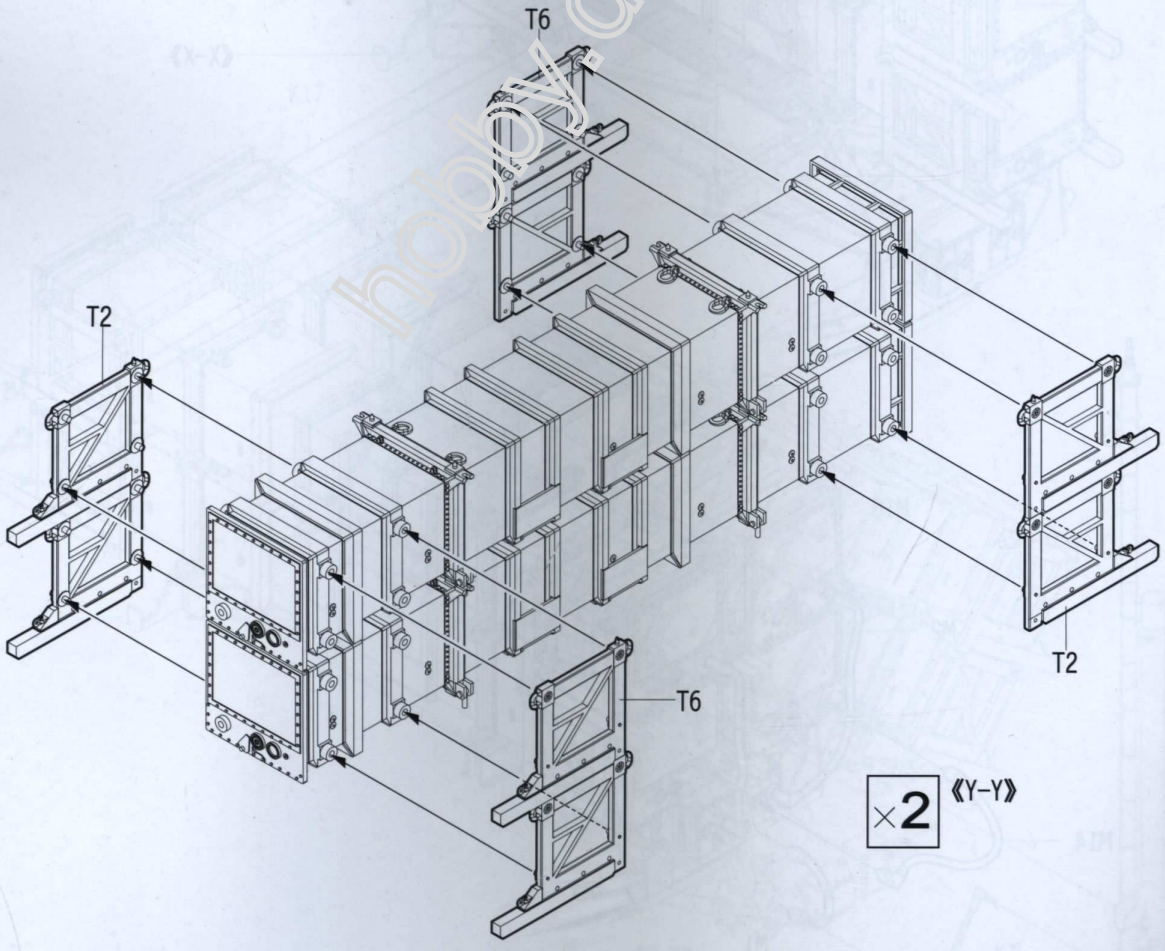

×2 《Y-Y》

hobby.dn.ua

16

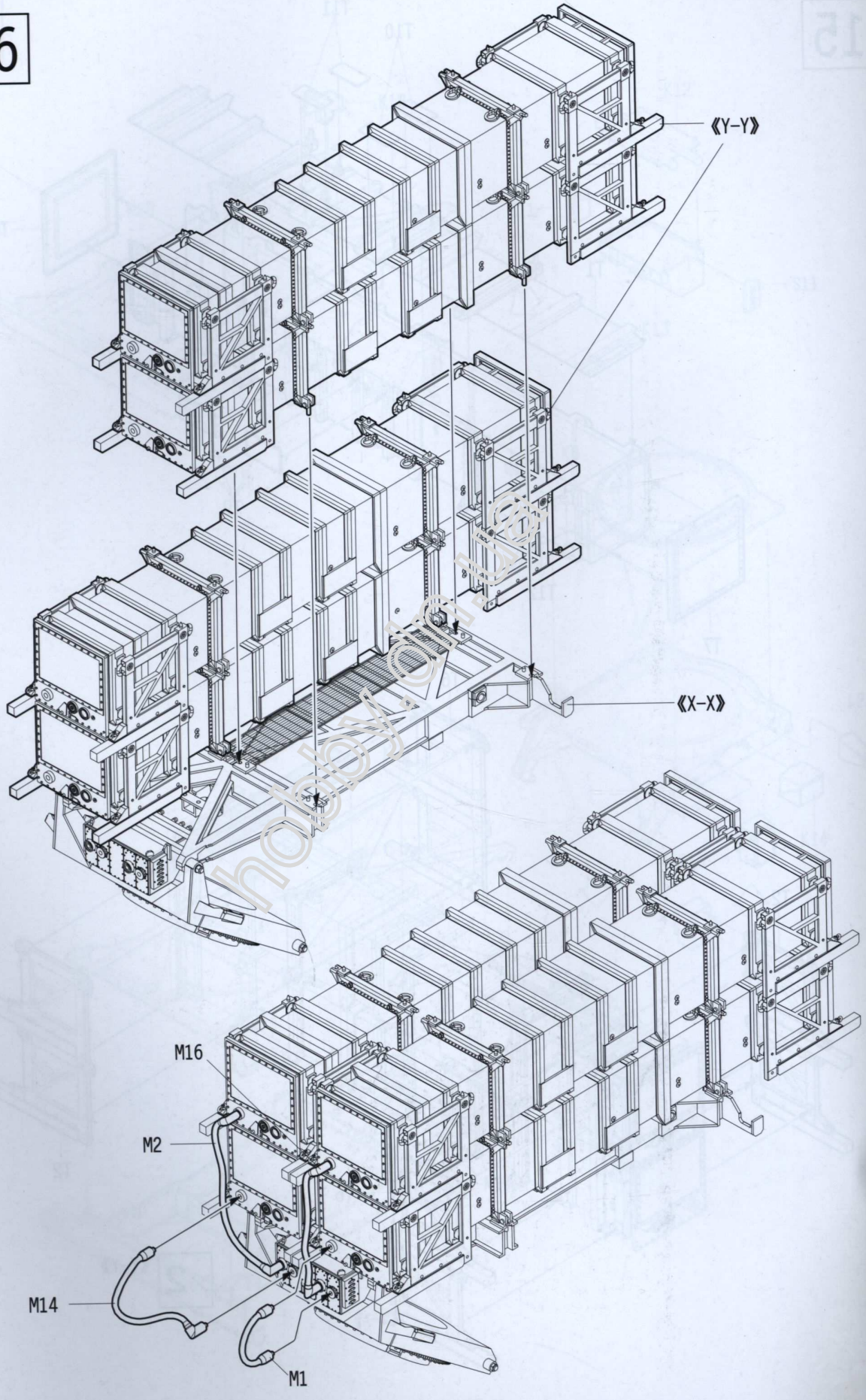

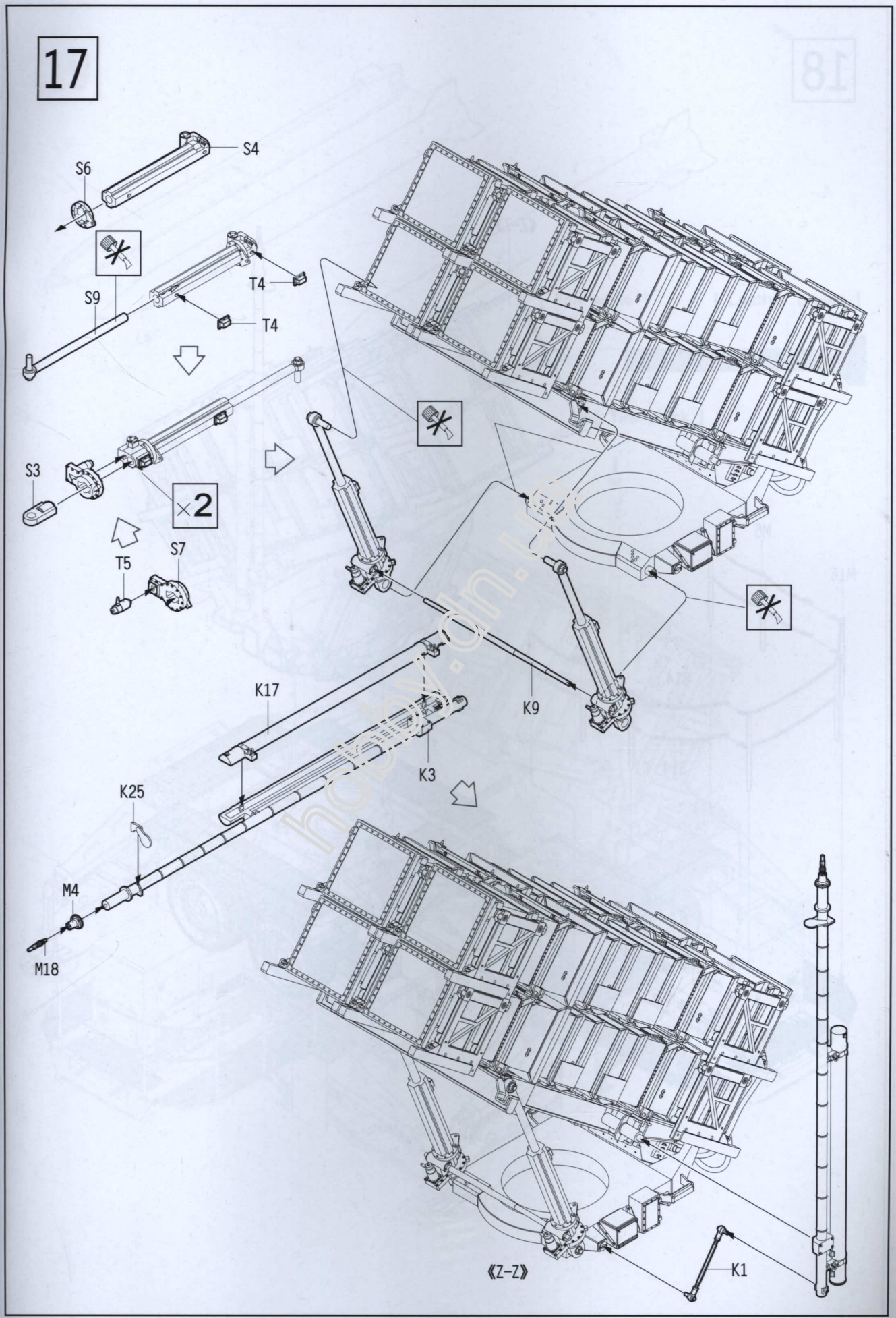
17
S4
S6
S9
T4
T4
S3
×2
T5
S7
K17
K9
K3
K25
M4
M18
《Z-Z》
K1

18

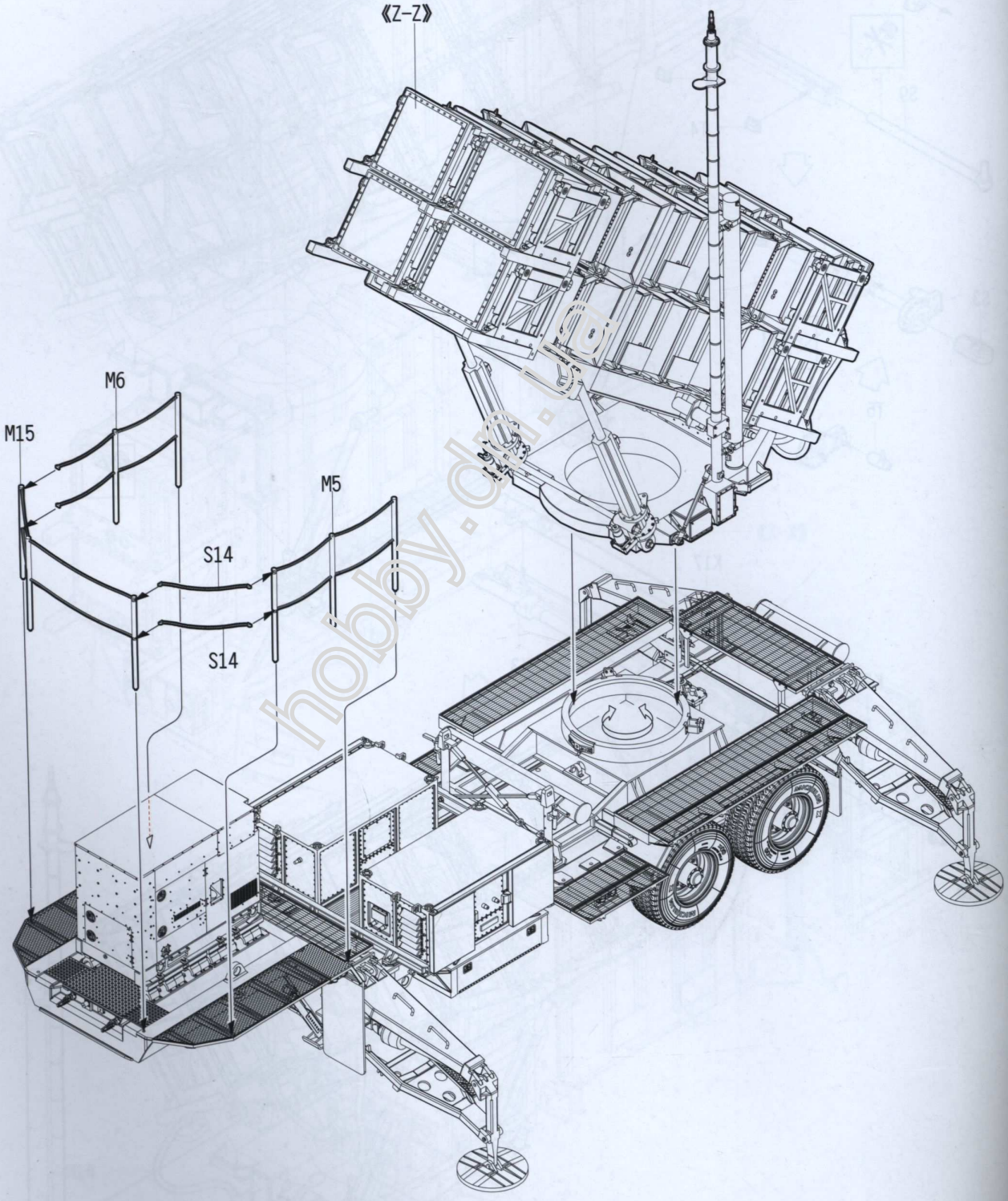

hobby.dn.ua

19

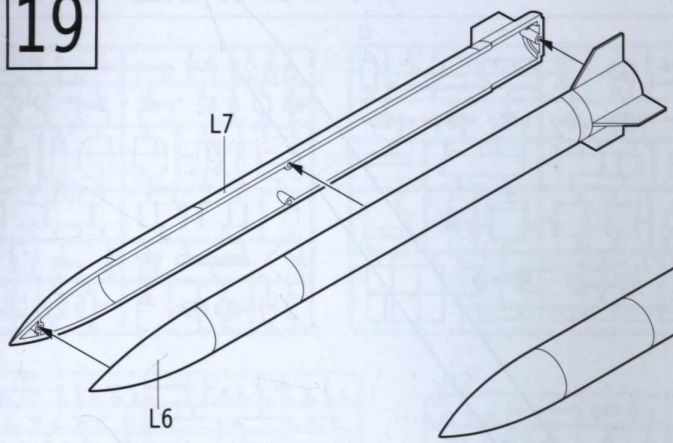

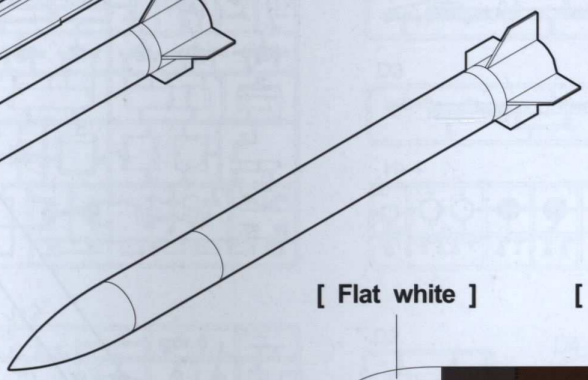

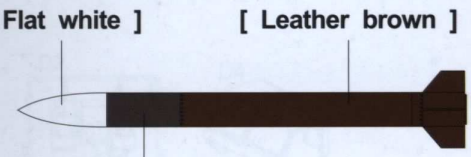

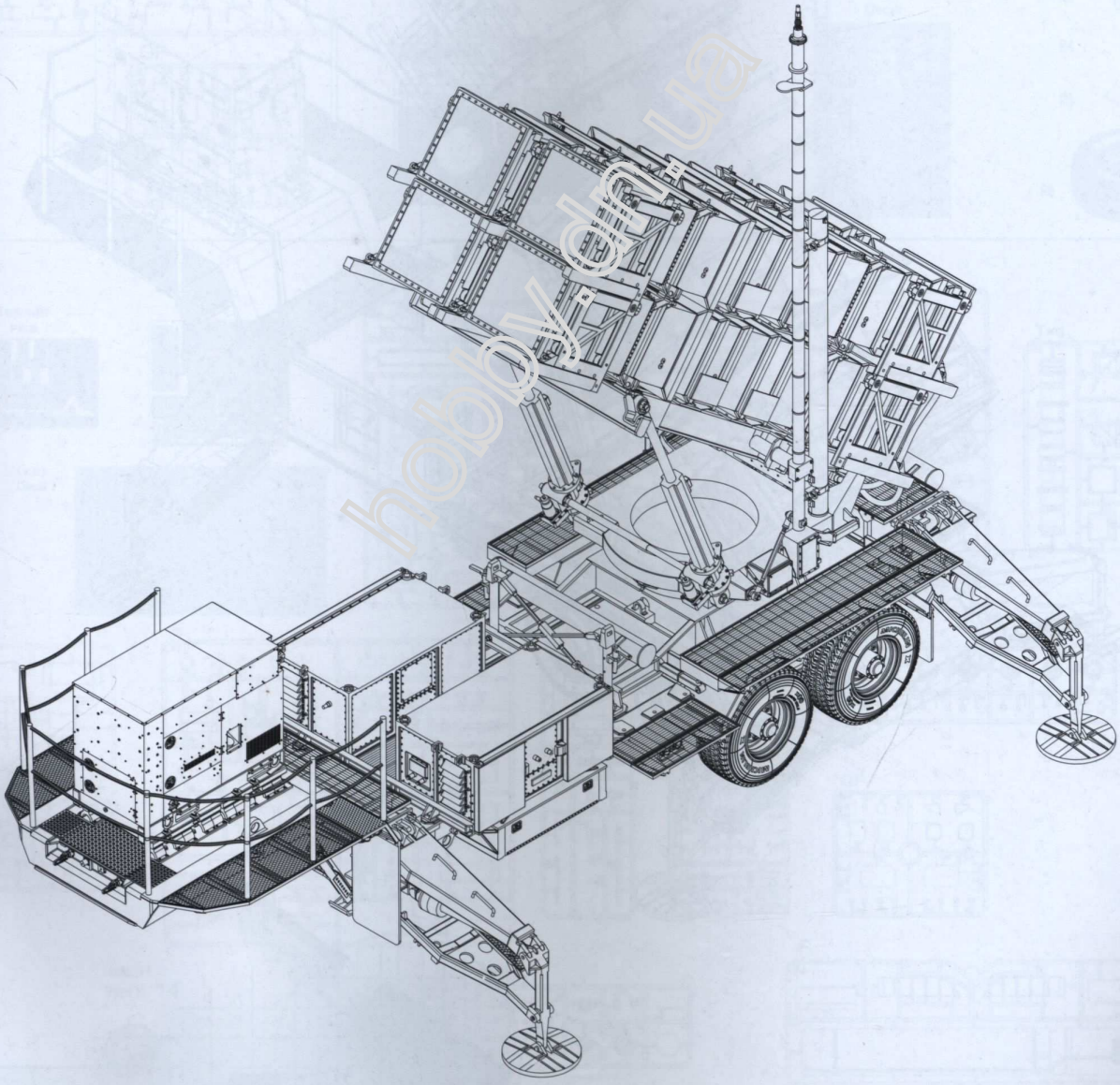

hobby.dn.ua

20

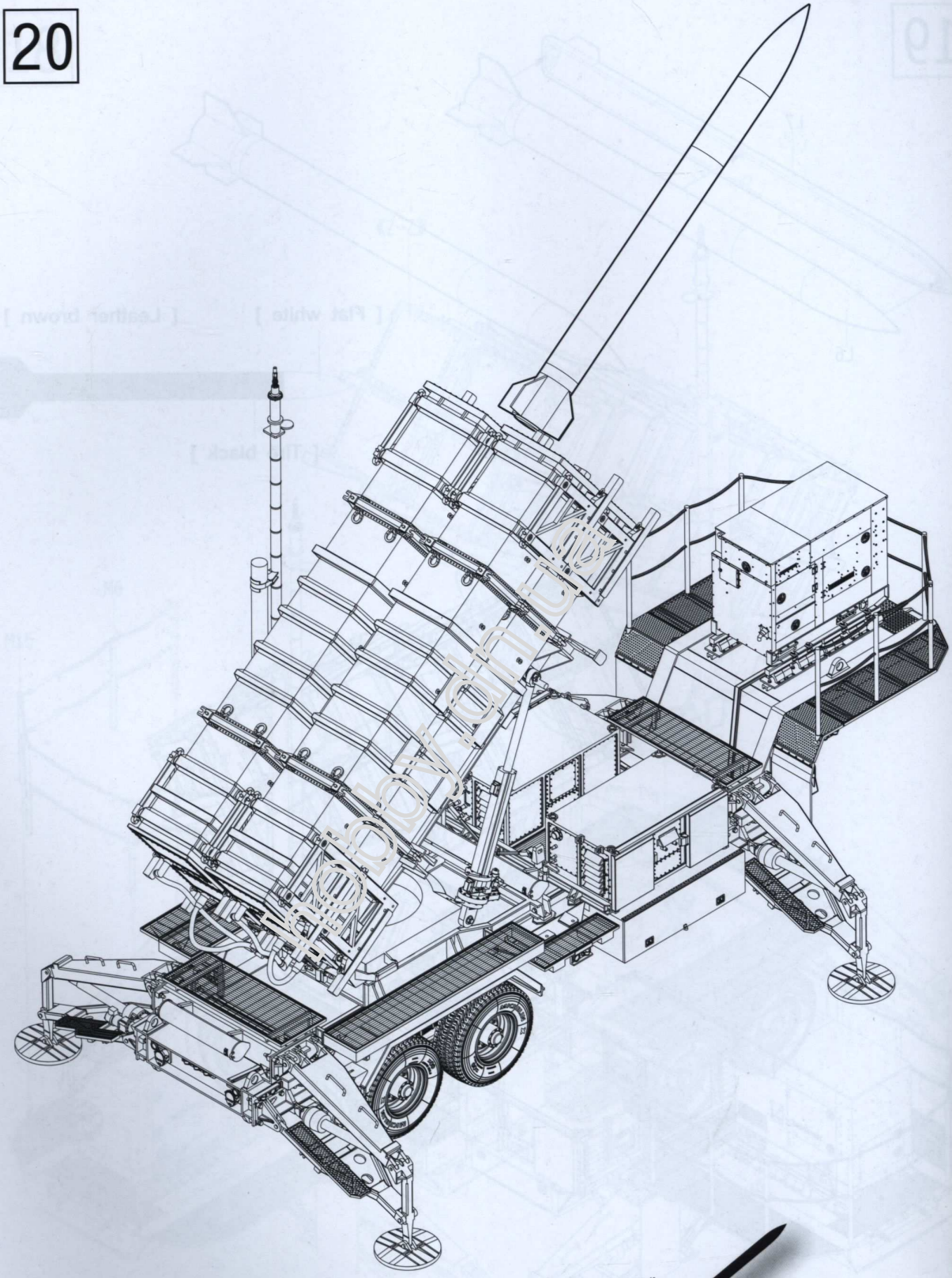

PARTS LIST 零件表

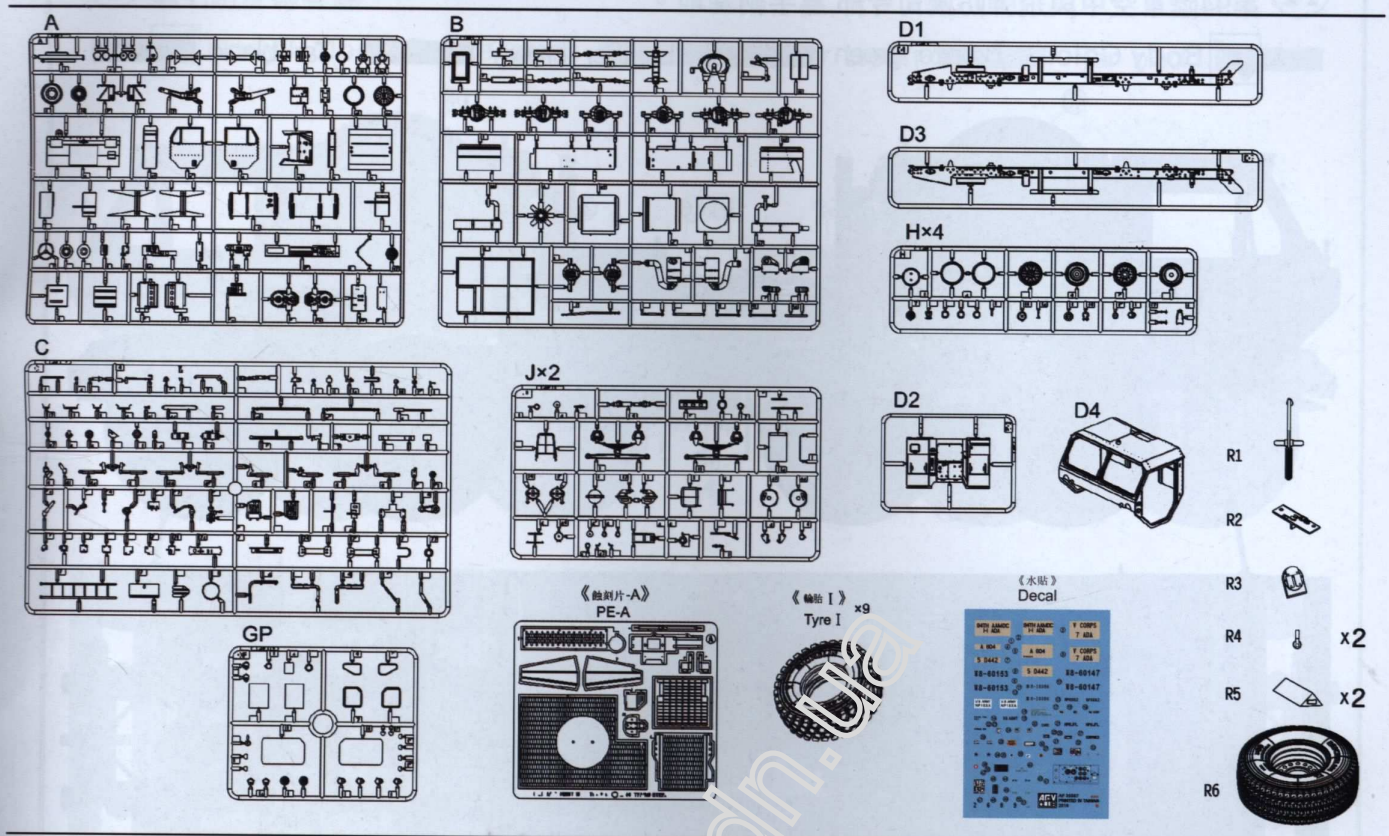

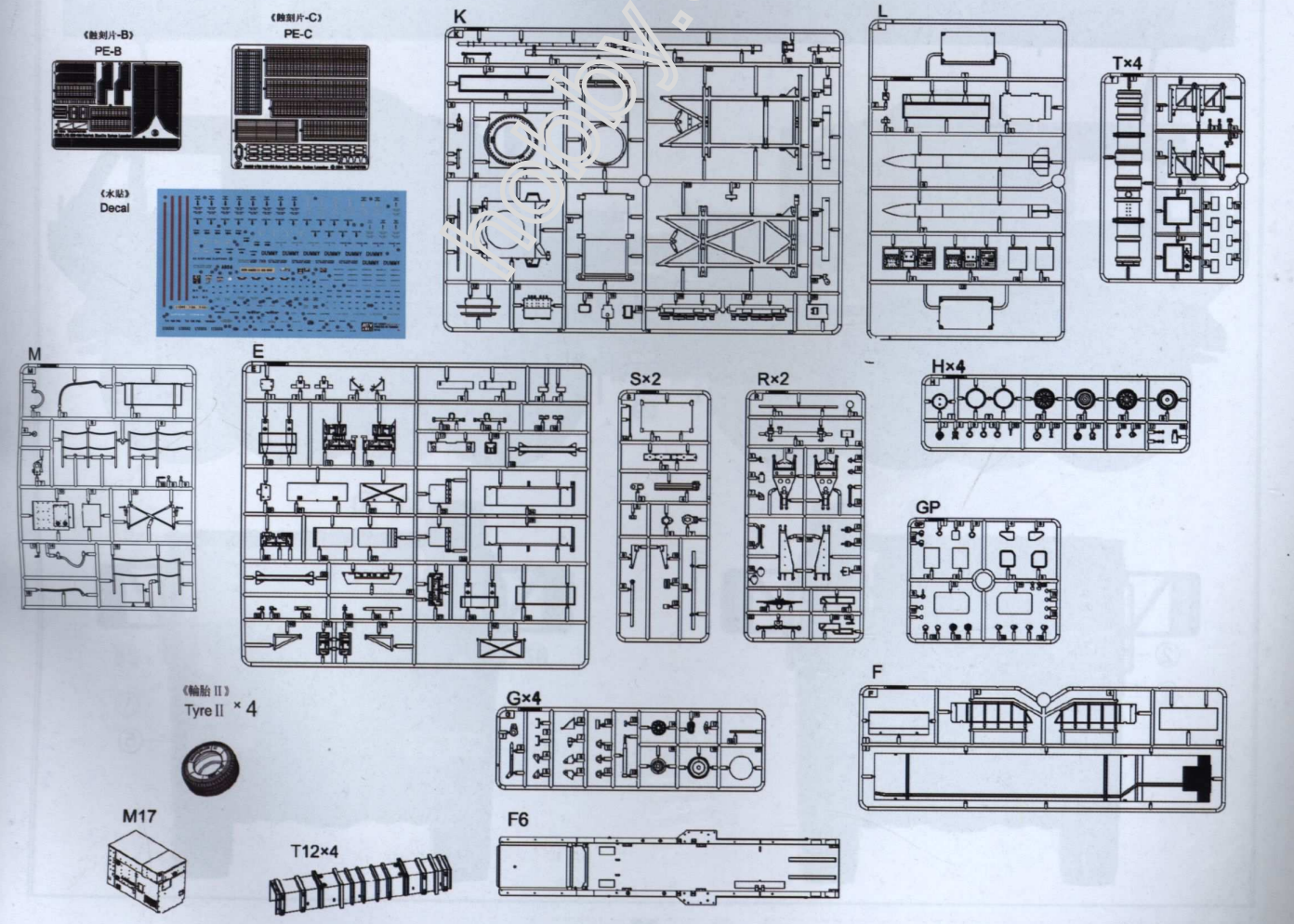

Ⓐ 94th Army Air and Missile Defense Command, Kadena Air Base.
第94陸軍空中與飛彈防禦司令部,嘉手納基地。

Body Color: Bronze green Leather brown Tar black

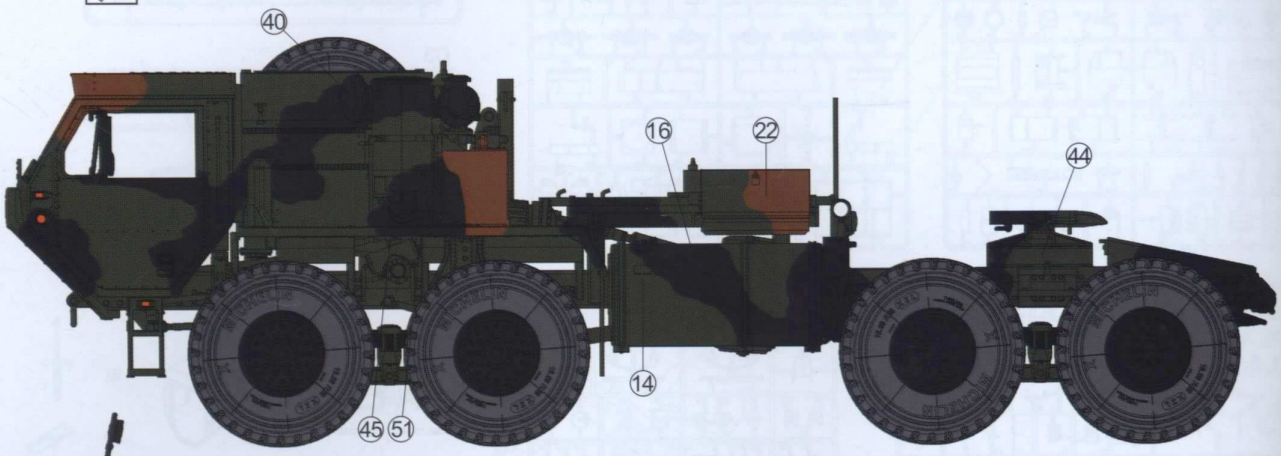

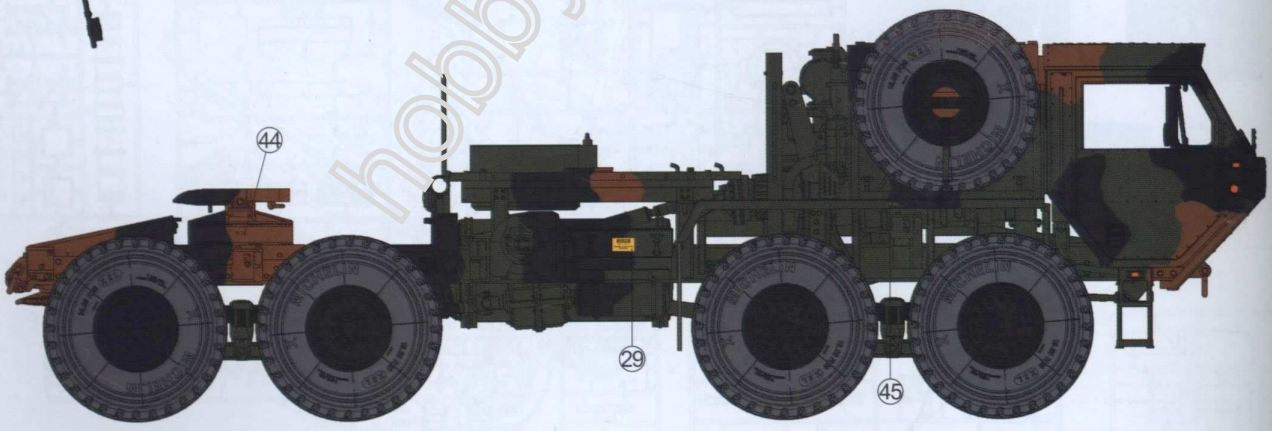

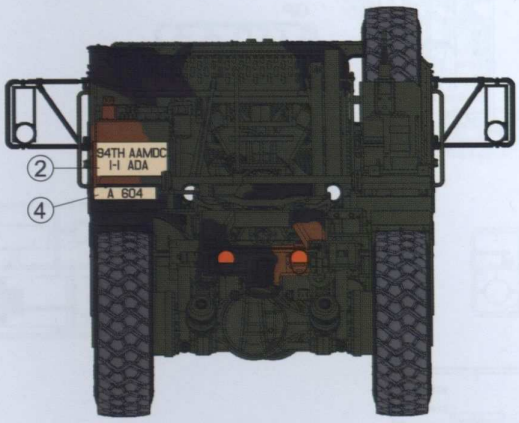

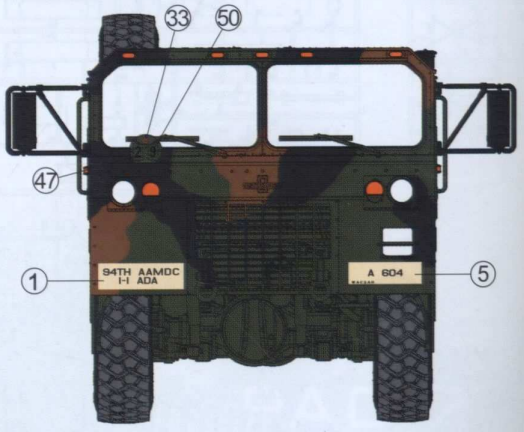

hobby.dn.ua

B 7th Air Defense Artillery Regiment.
第七防空砲兵團。

Body Color: Bronze green Leather brown Tar black

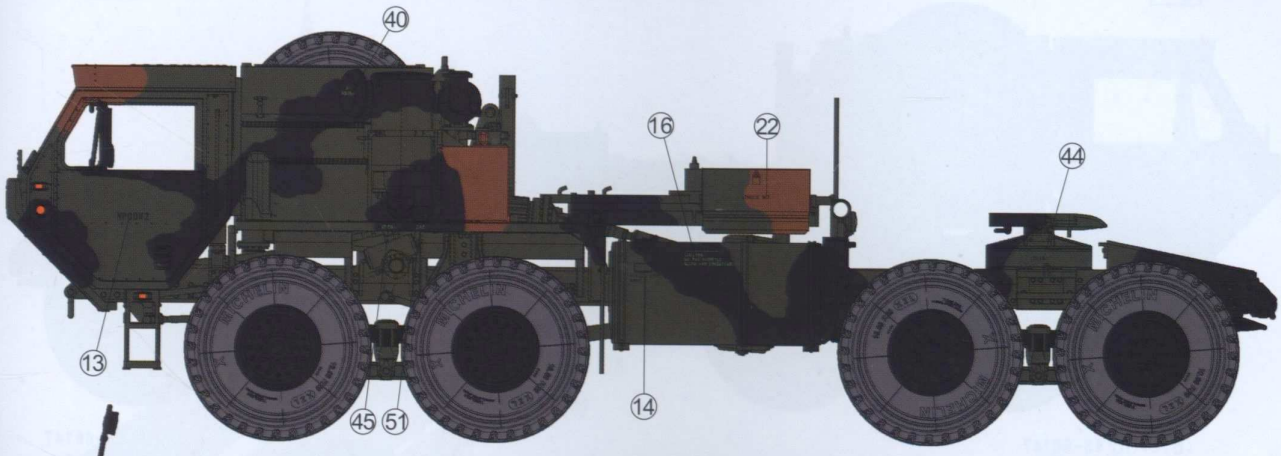

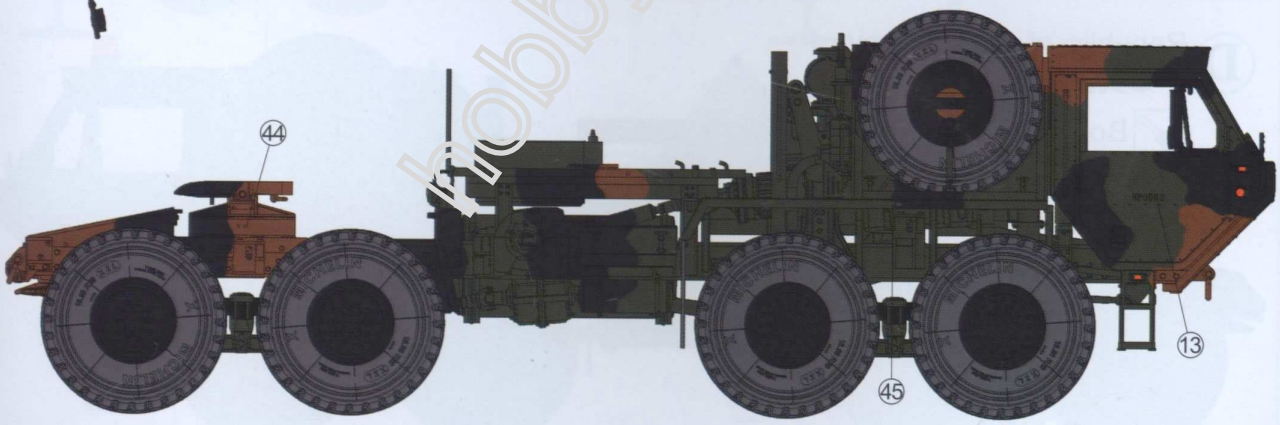

hobby.dn.ua

Ⓒ Republic of China Army.
中華民國陸軍。

Body Color: Bronze green Leather brown Tar black

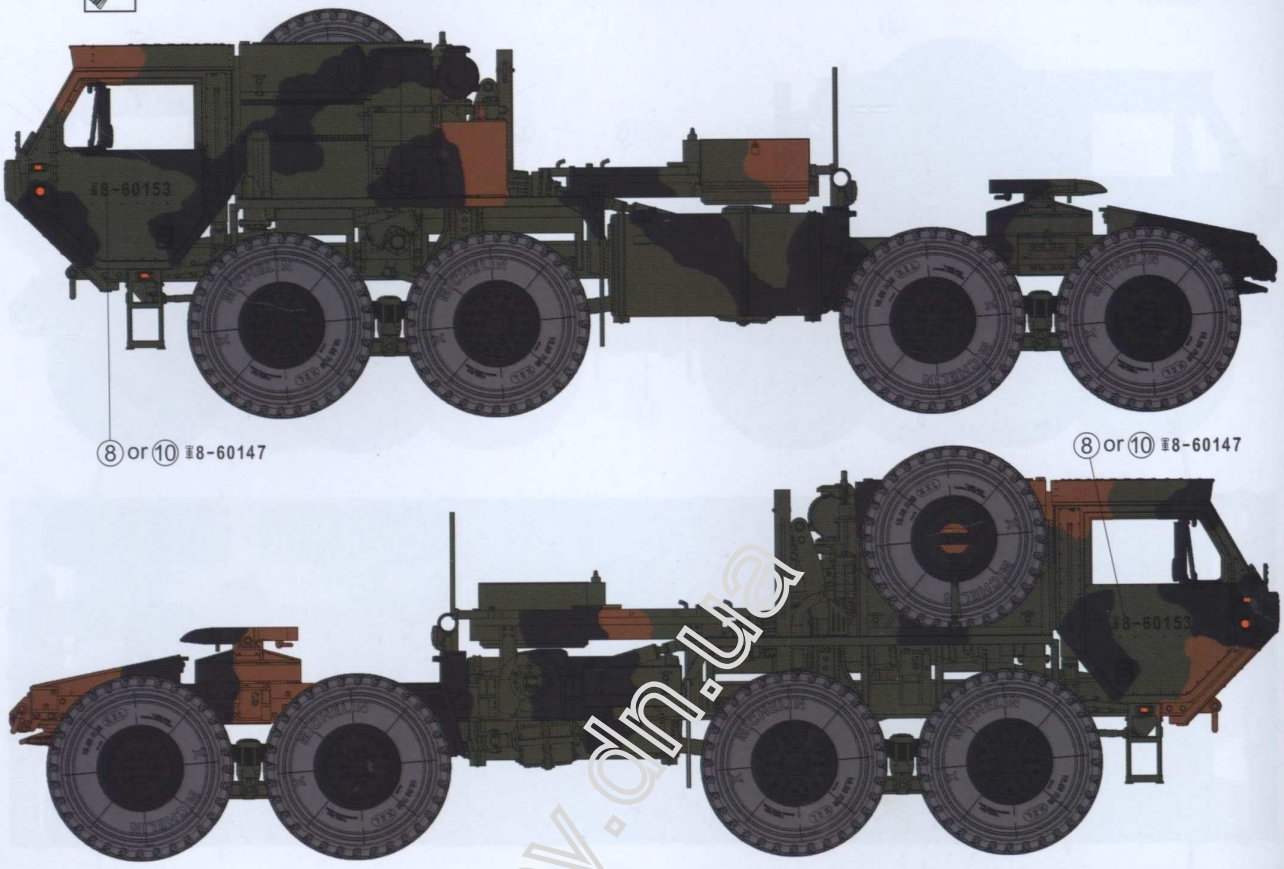

Ⓓ Republic of China Army.
中華民國陸軍。

Body Color: Green FS34079

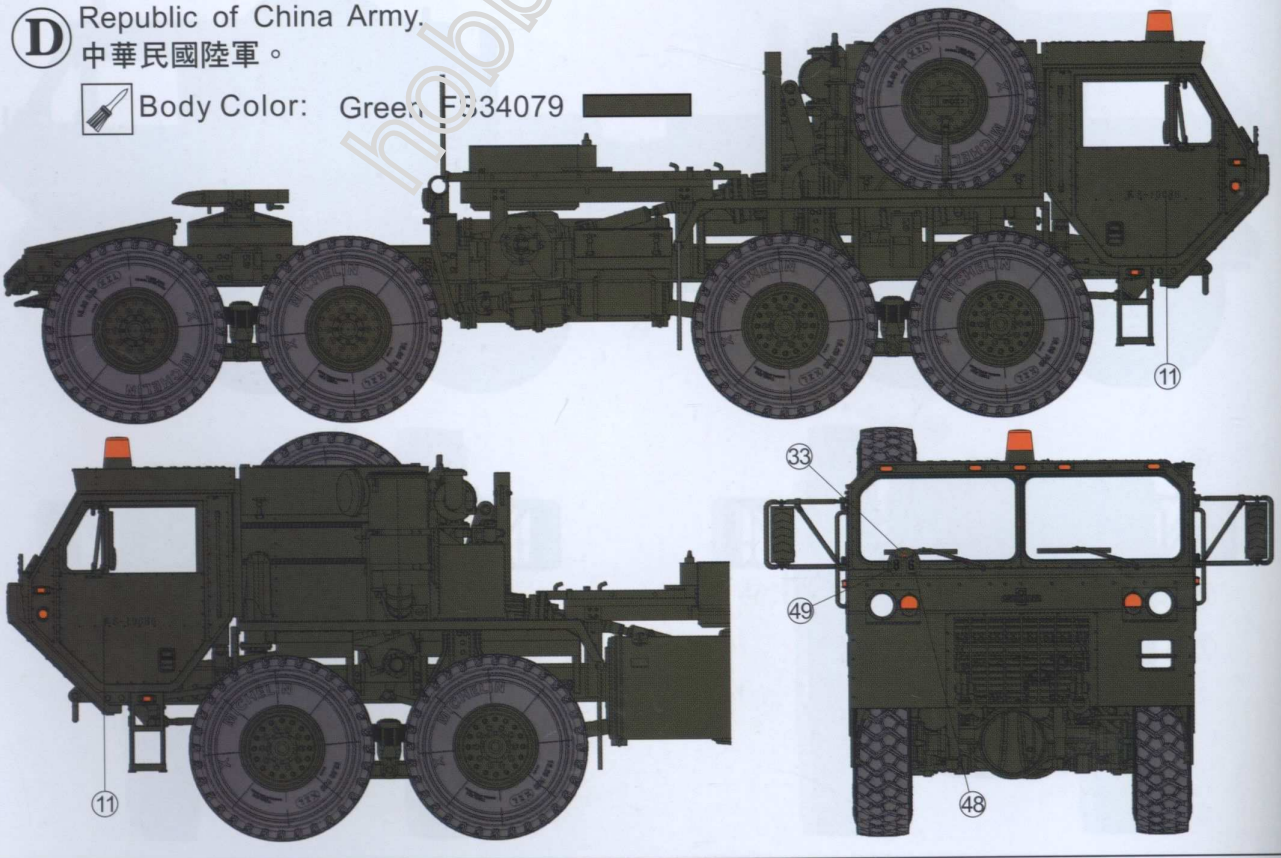

hobby.dn.ua

E 94th Army Air and Missile Defense Command, Kadena Air Base.
第94陸軍空中與飛彈防禦司令部,嘉手納基地。

Body Color: Bronze green Leather brown Tar black

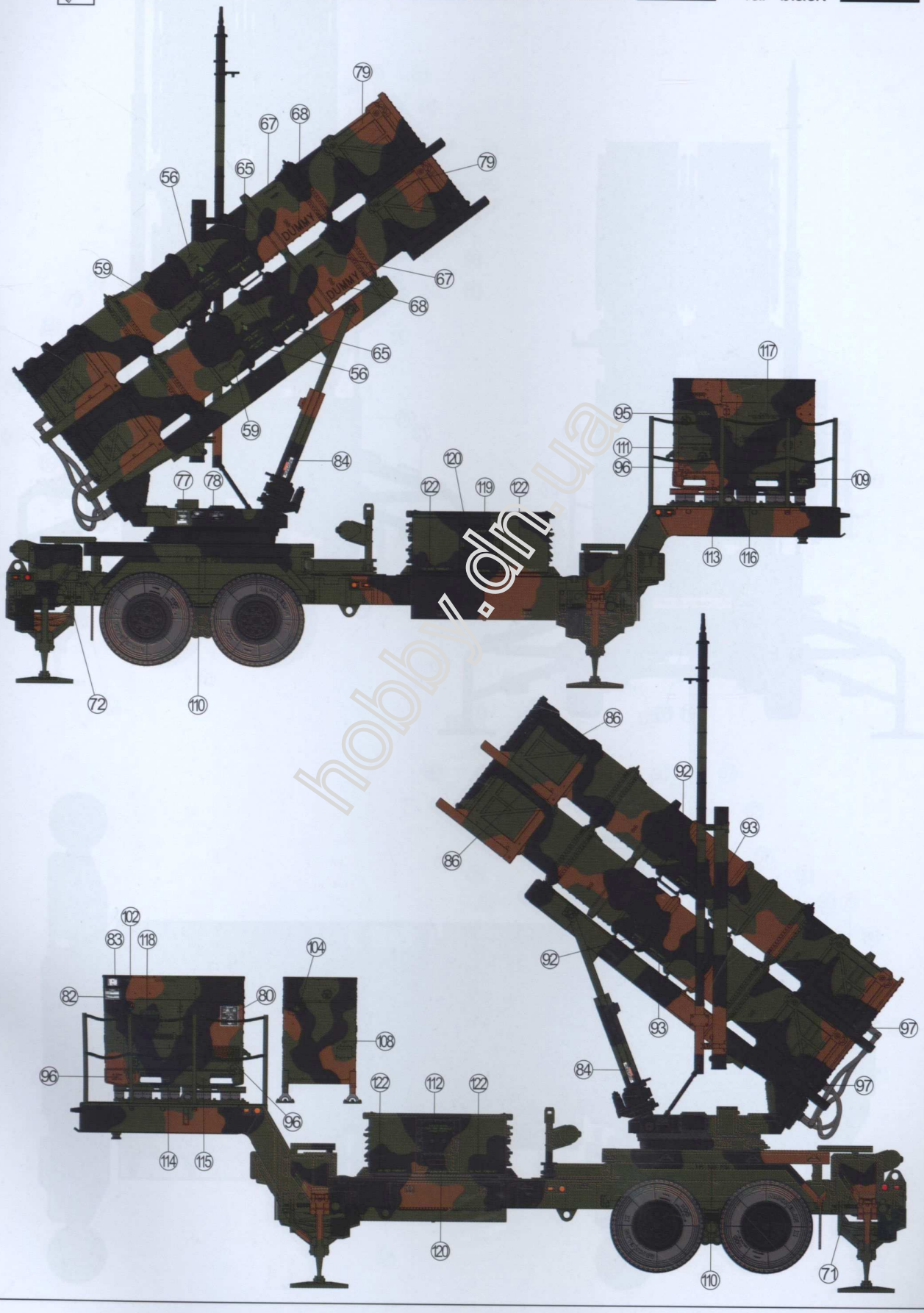

hobby.dn.ua

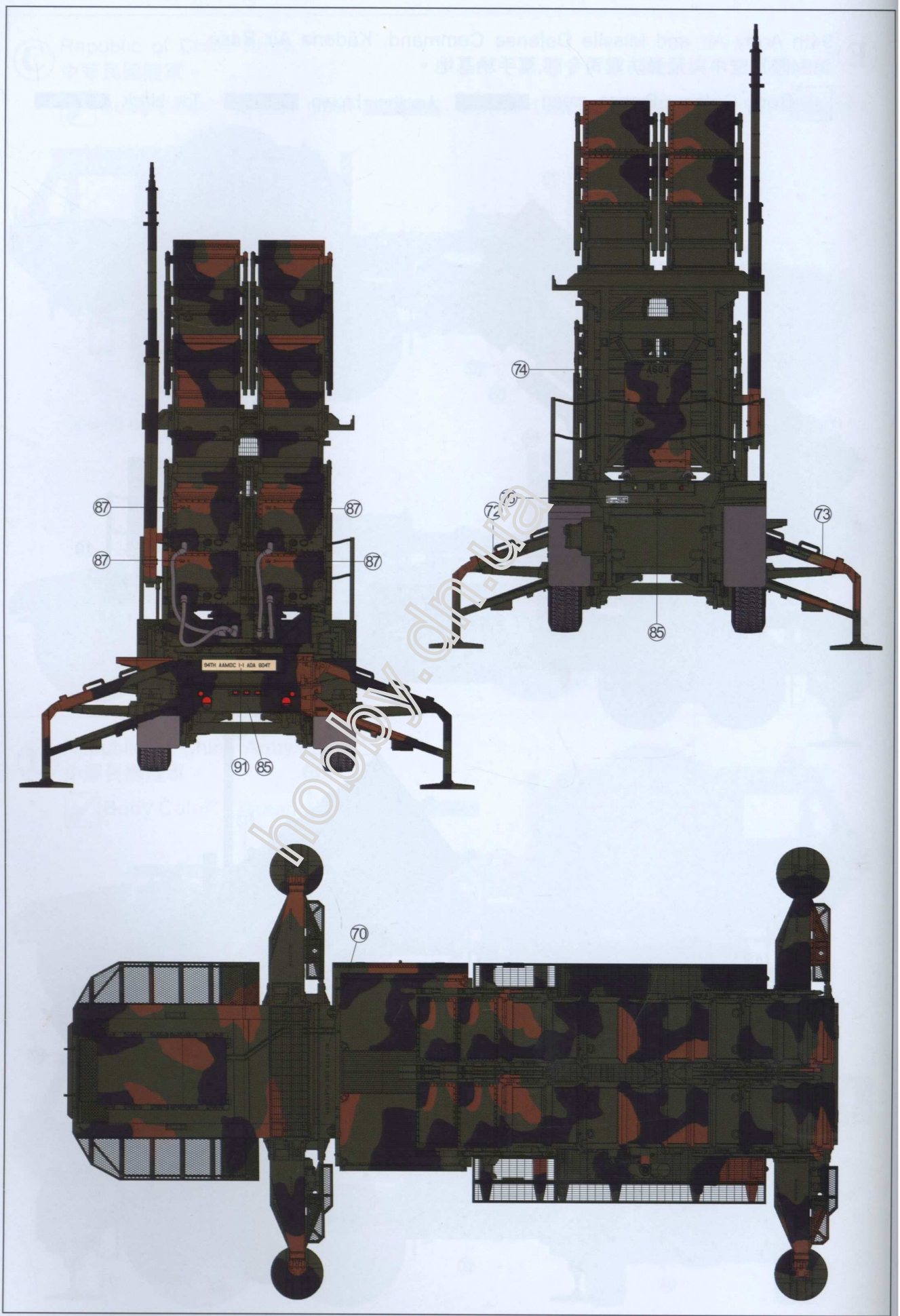

hobby.dn.ua

Ⓕ Republic of China Army.
中華民國陸軍。

Body Color: Green FS34079

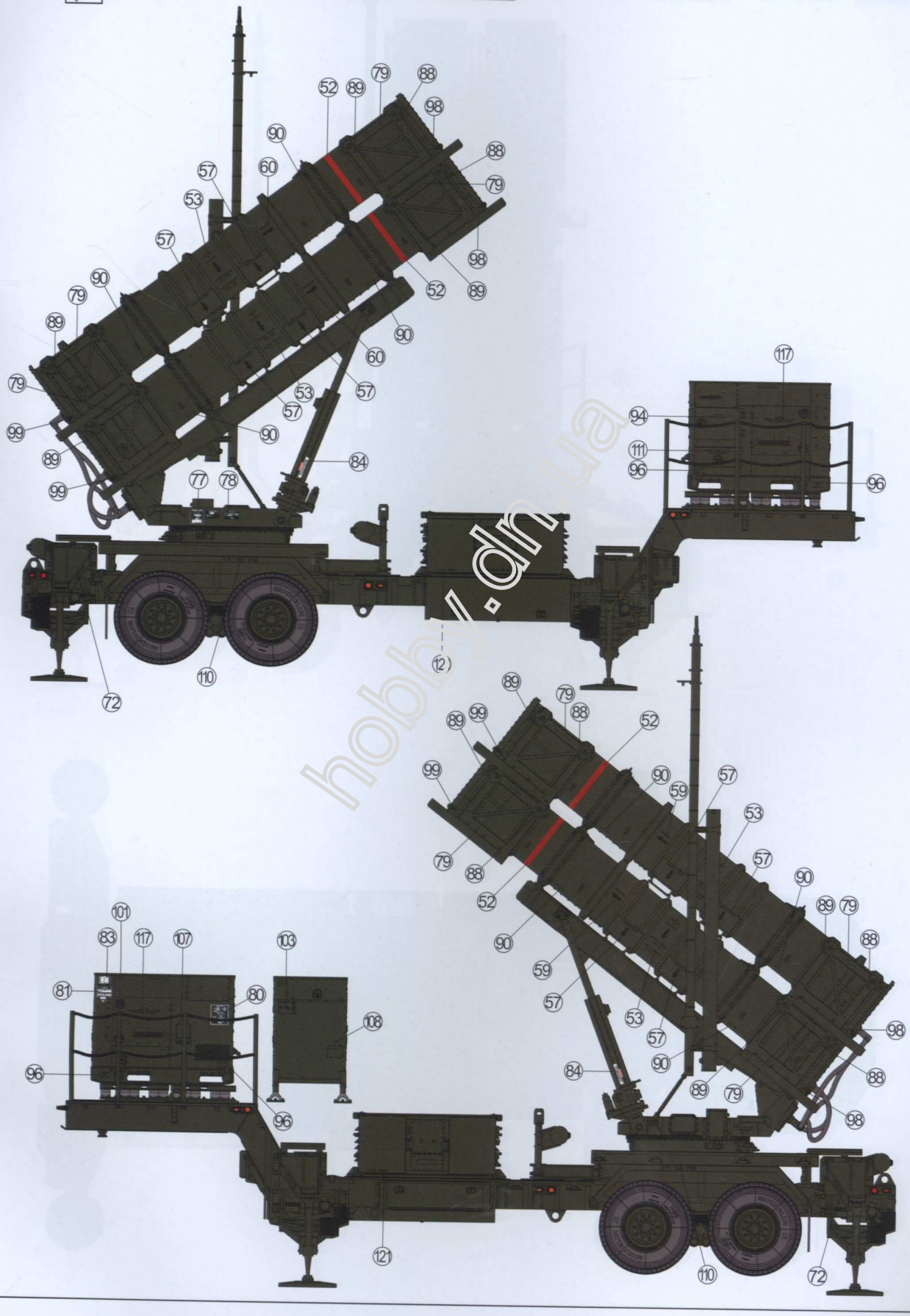

hobby.dn.ua

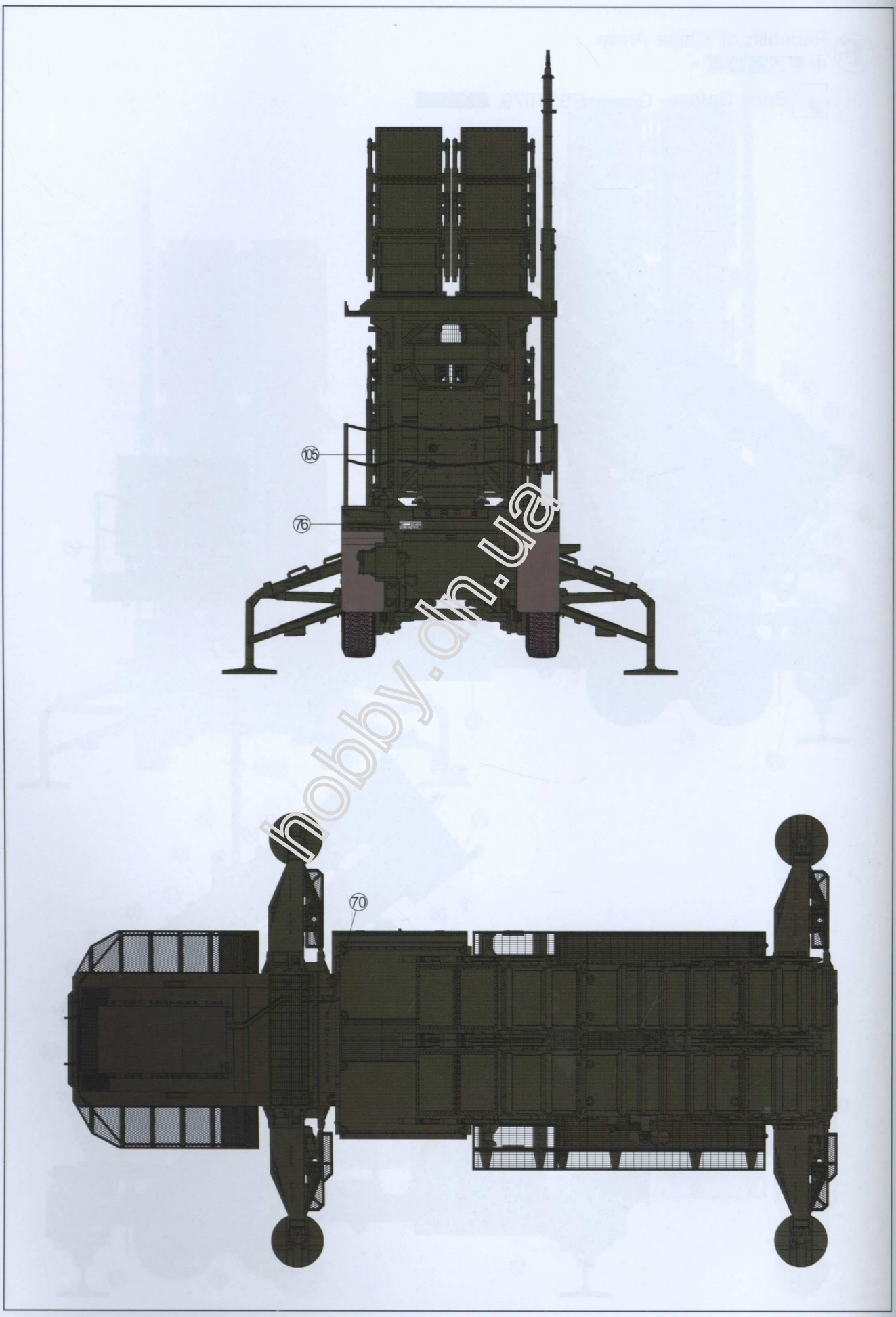

hobby.dn.ua

Ⓖ Republic of China Army.
中華民國陸軍。

Body Color: Bronze green Leather brown Tar black

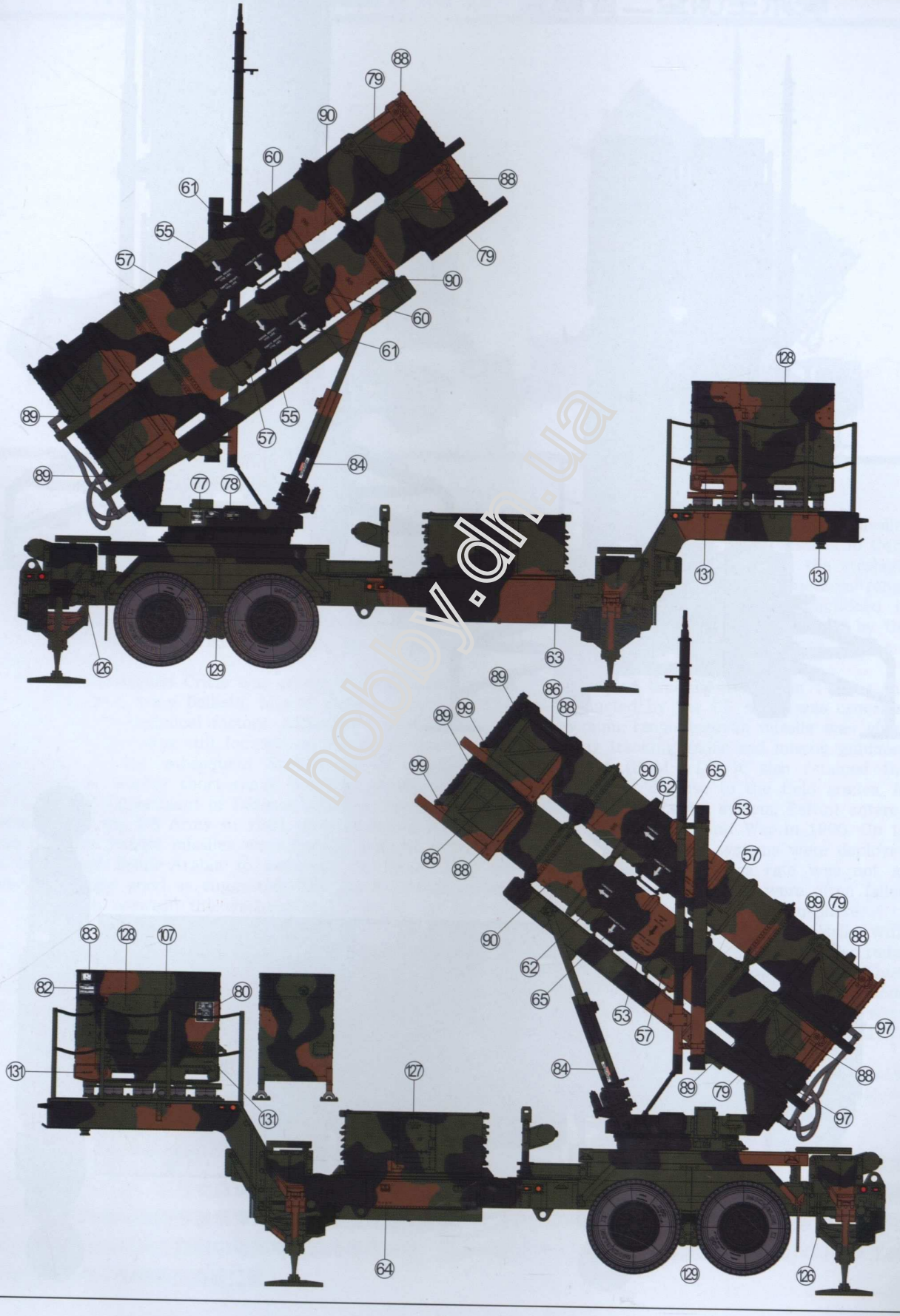

hobby.dn.ua

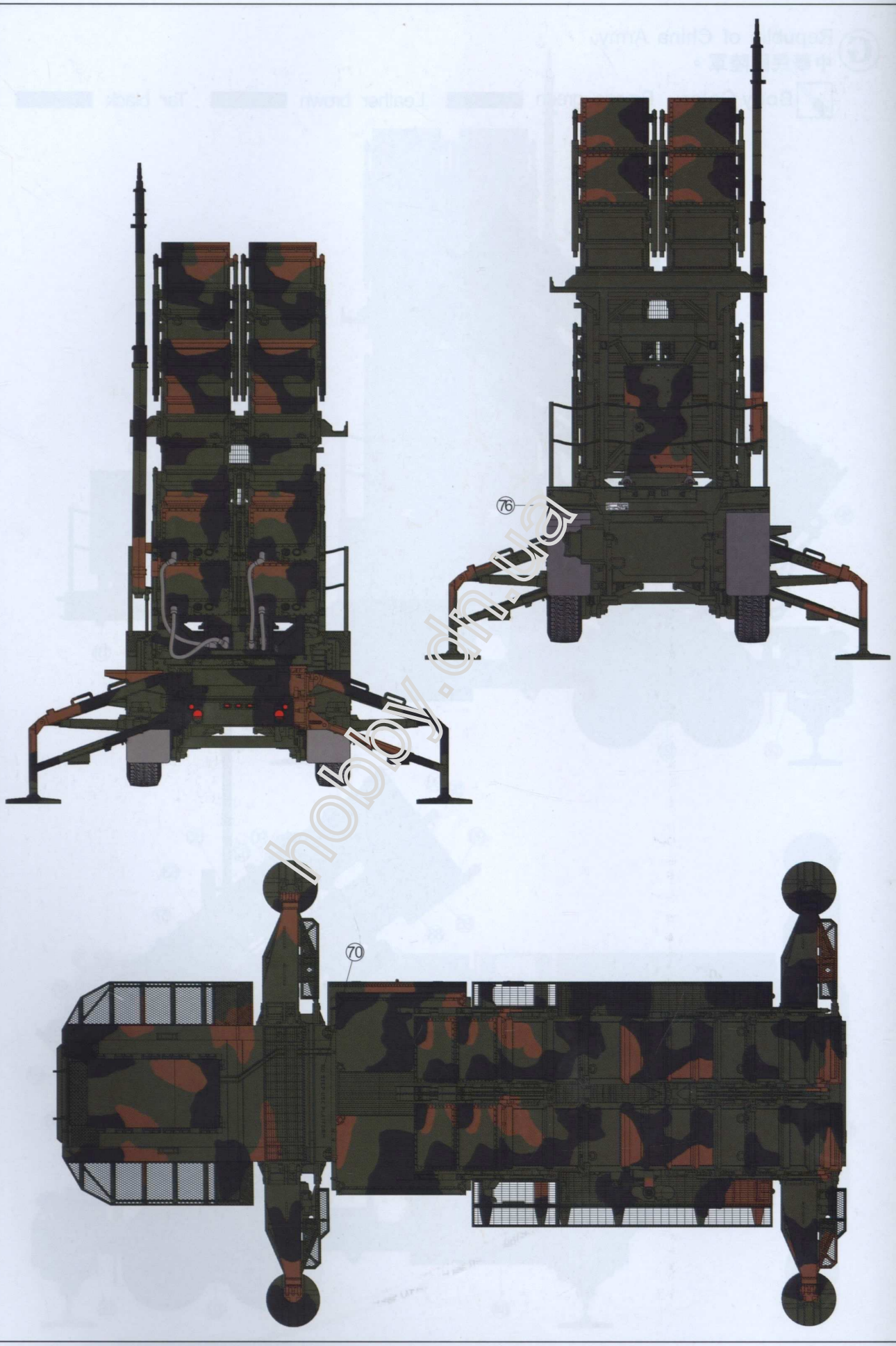

hobby.dn.ua