SAAB J32B/E Lansen

Scale 1/72

TARANGUS

TA7202

The Saab 32 Lansen (meaning the Lance) was a two-seater, high transonic attack aircraft produced by SAAB from 1955 to 1960 for the Swedish Air Force (Flygvapnet). During its long operational life, the Saab 32 also served as a fighter, reconnaissance, electronic warfare and a target-tug aircraft.

This model kit depicts the attacker version A32A Lansen.

When the A32A entered service they replaced the last piston-powered SAAB B18 bomber. SAAB 32 Lansen broke the sound barrier on 25 October 1953 when it exceeded Mach 1 in a shallow dive. The A32 ("A" stands for attack) had an armament of four 20 mm Bofors m/49 cannon hidden under flaps in the nose. It could carry the Rb04C anti-ship missile. The Lansen normally was fitted with two Rb04C but it could also carry an additional missile. Its main role was to prevent any Soviet invasion across Sweden's coastline.

One planned use of the A 32A was to deliver nuclear warheads or chemical weapons. Sweden had an active nuclear weapons program during the 1950s and 1960s, but no weapons were ever produced.

The A32 Lansen was Sweden's last purpose-built attack aircraft. During the Cold War years, the Lansen distinguished itself with a solid if unspectacular career. Swedish pilots described it as pleasant to fly.
Gradually being replaced by more modern types, the Saab 32 was used into the late 1990s. Two still remain operational with the sole task of taking high altitude air samples for research purposes for the Swedish Radiation Safety Authority. It was used to collect volcanic ash samples in April and May 2010.

SAAB J32B/E Lansen

Scale 1/72

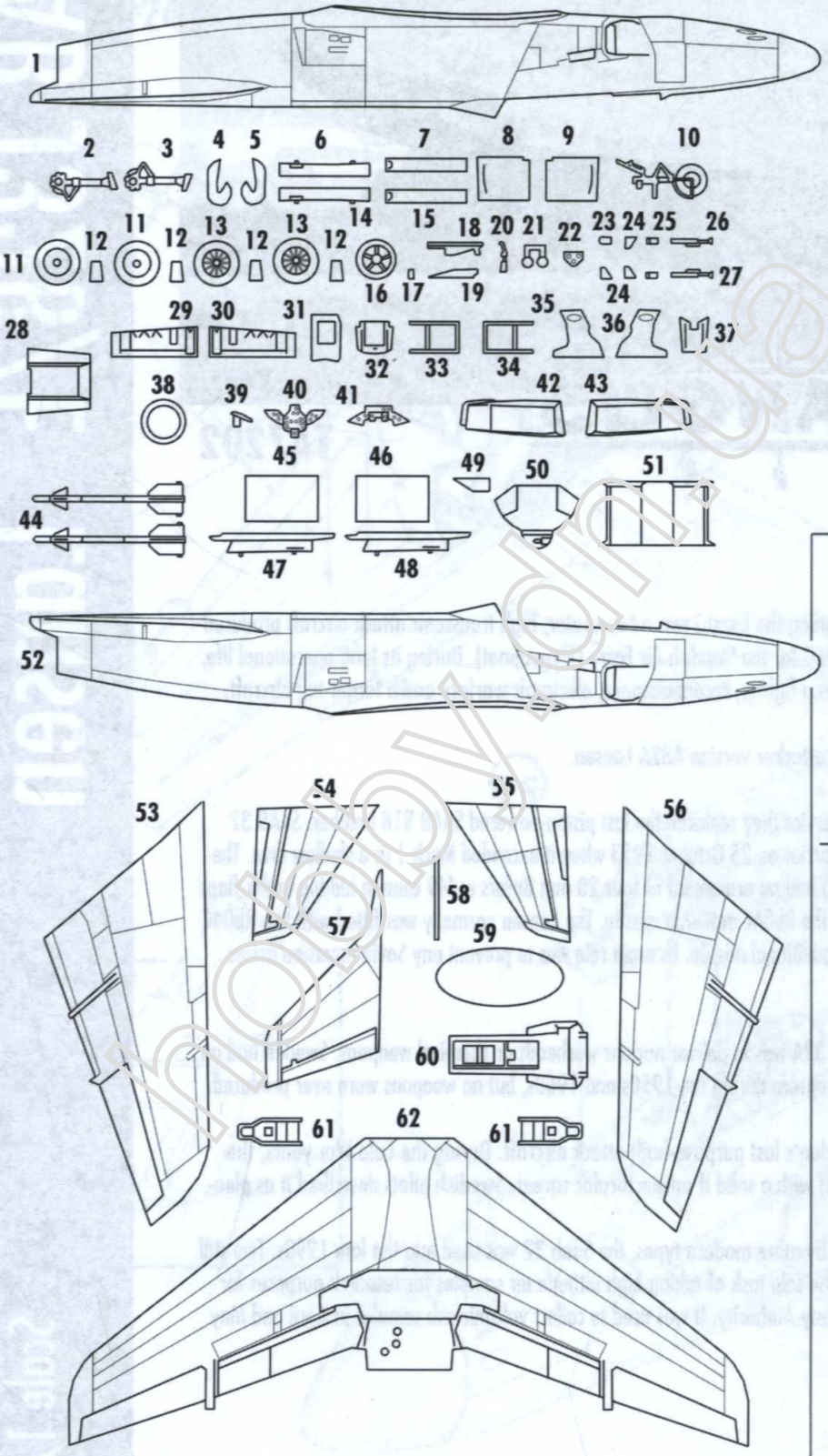

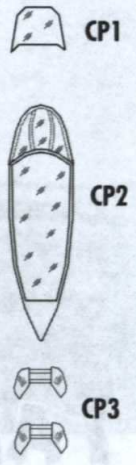

CLEAR PARTS (CP)

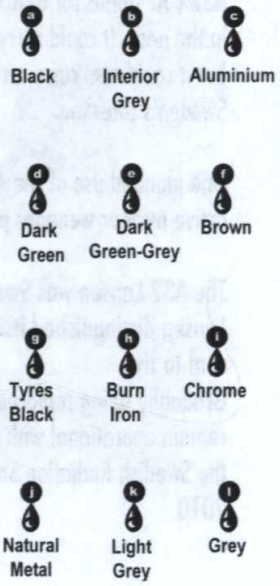

TARANGUS

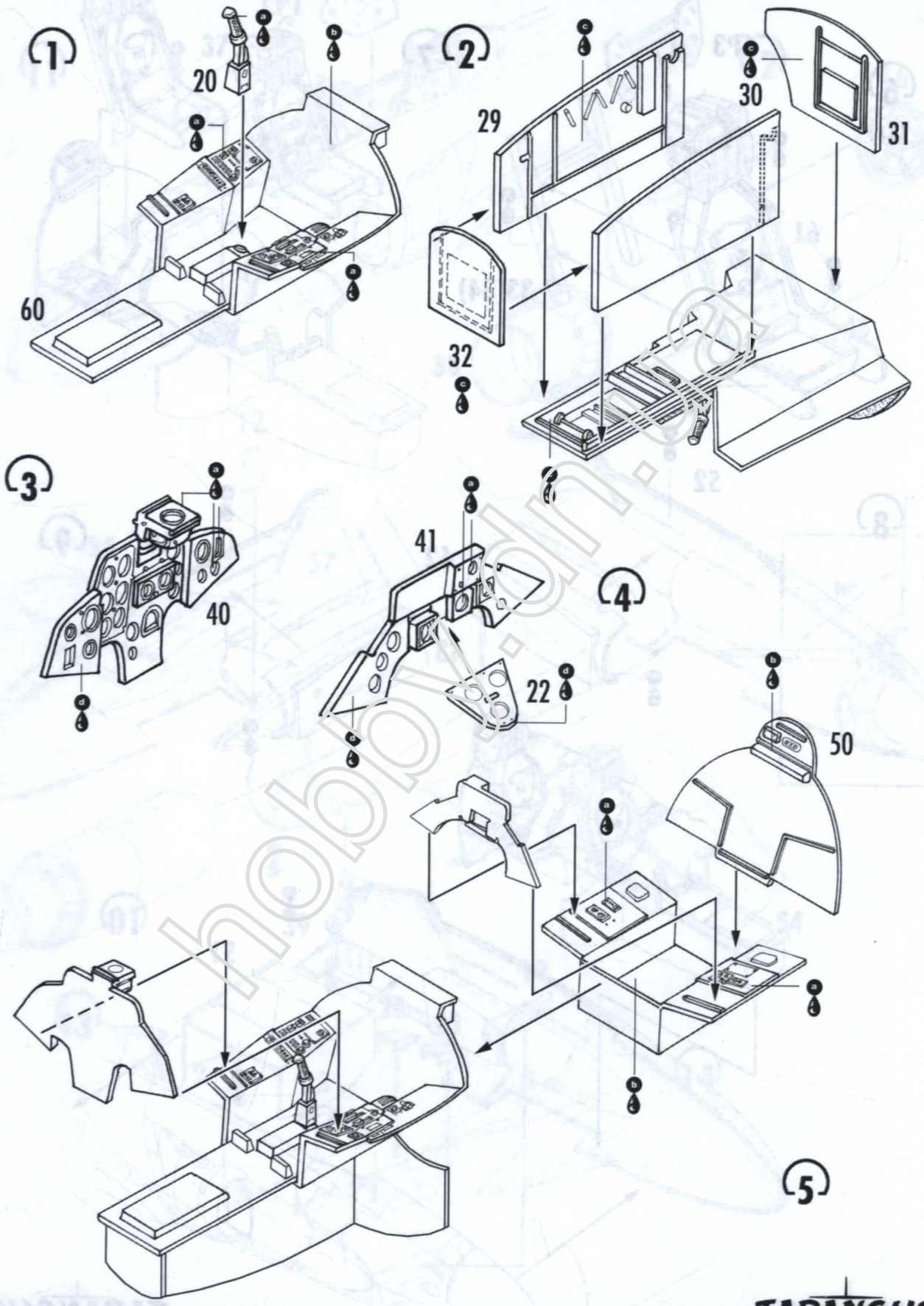

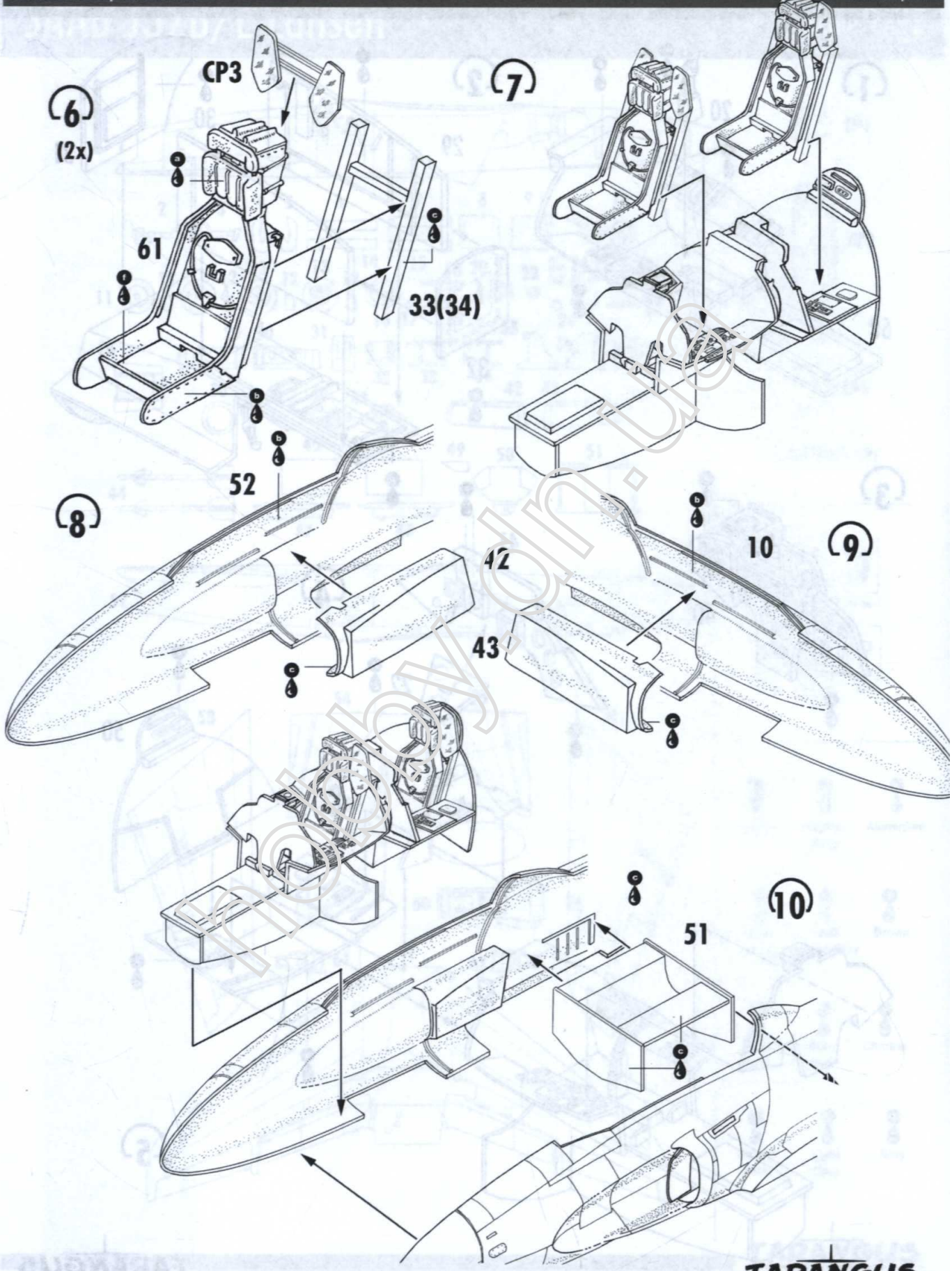

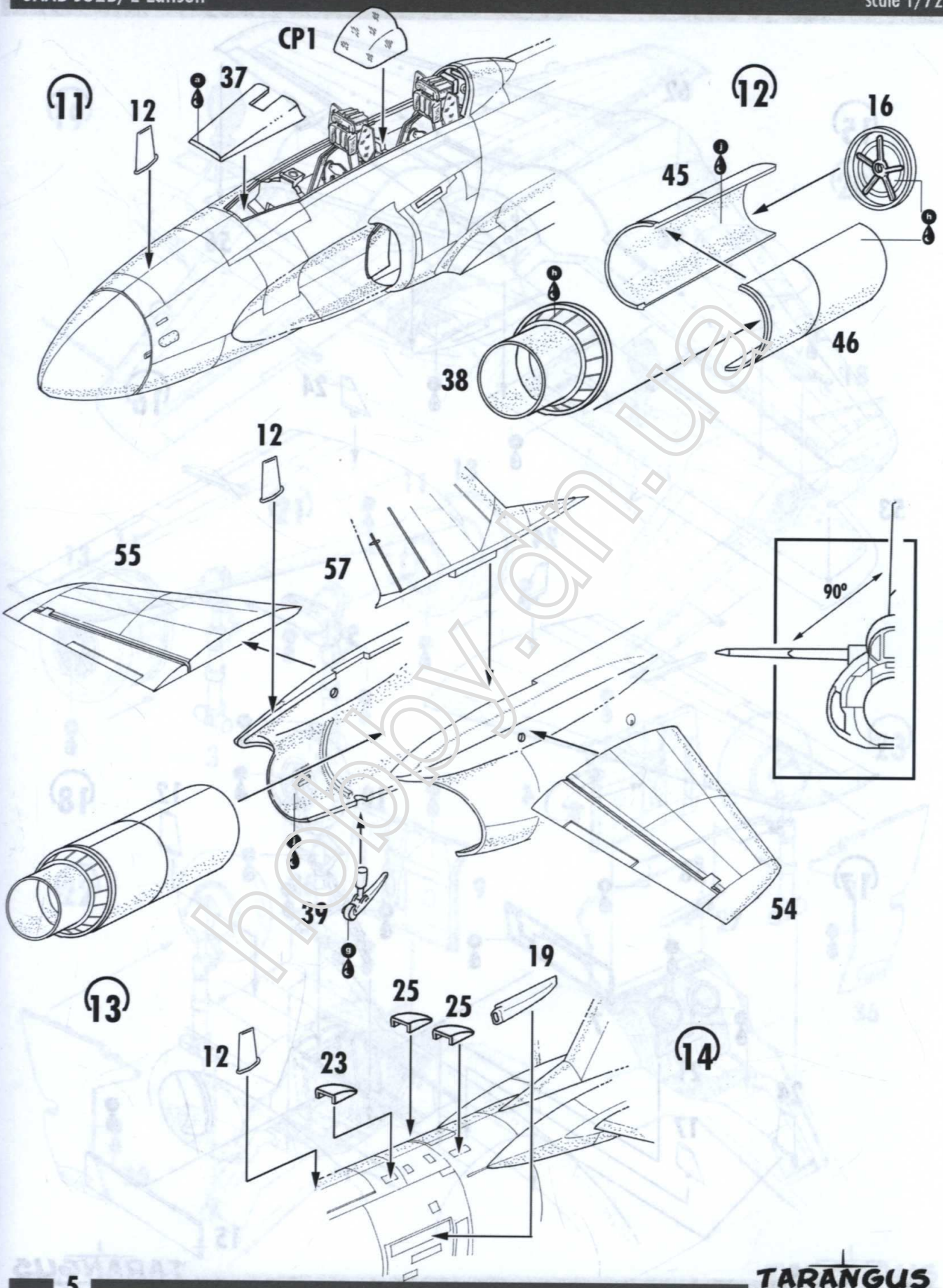

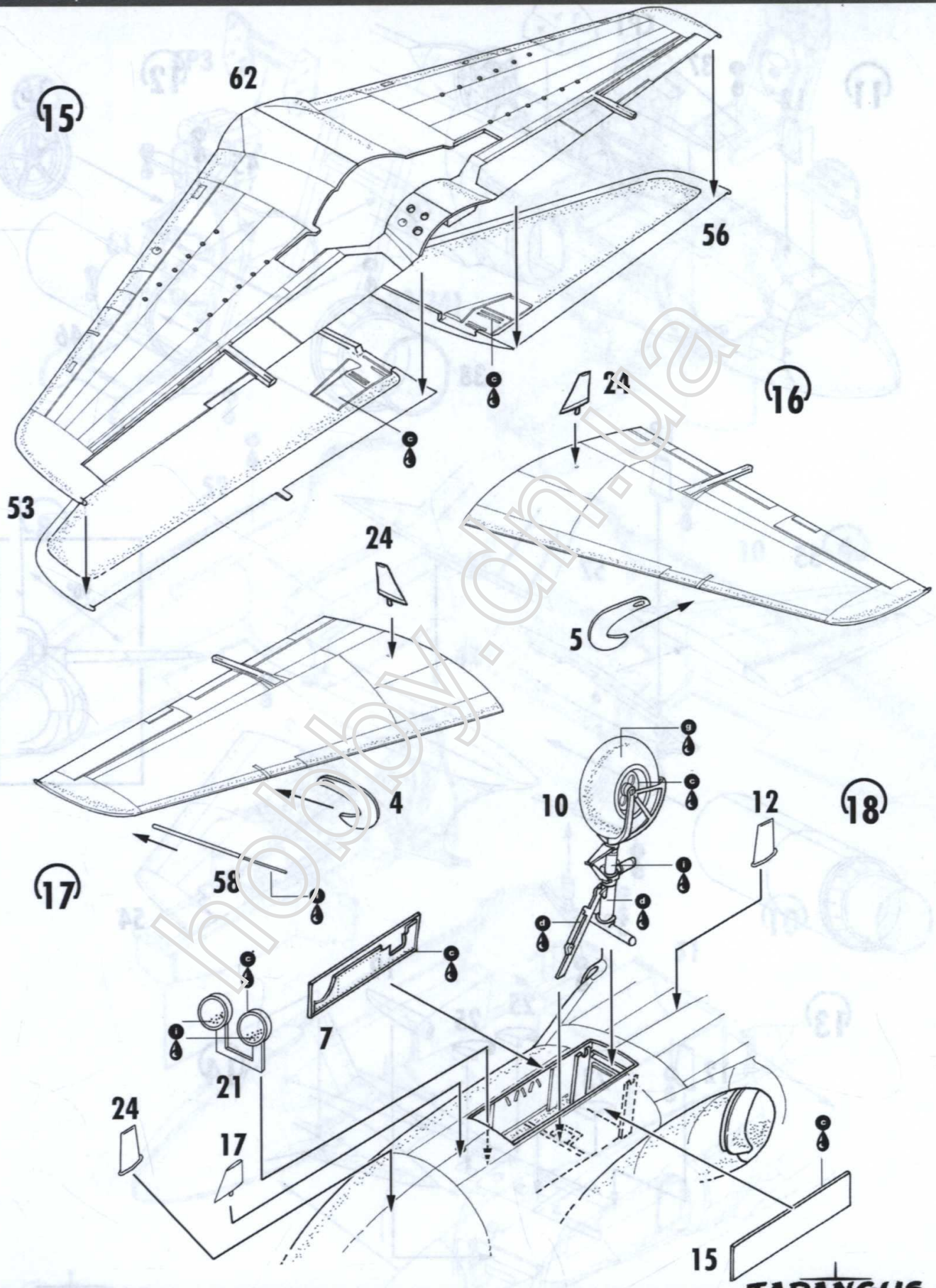

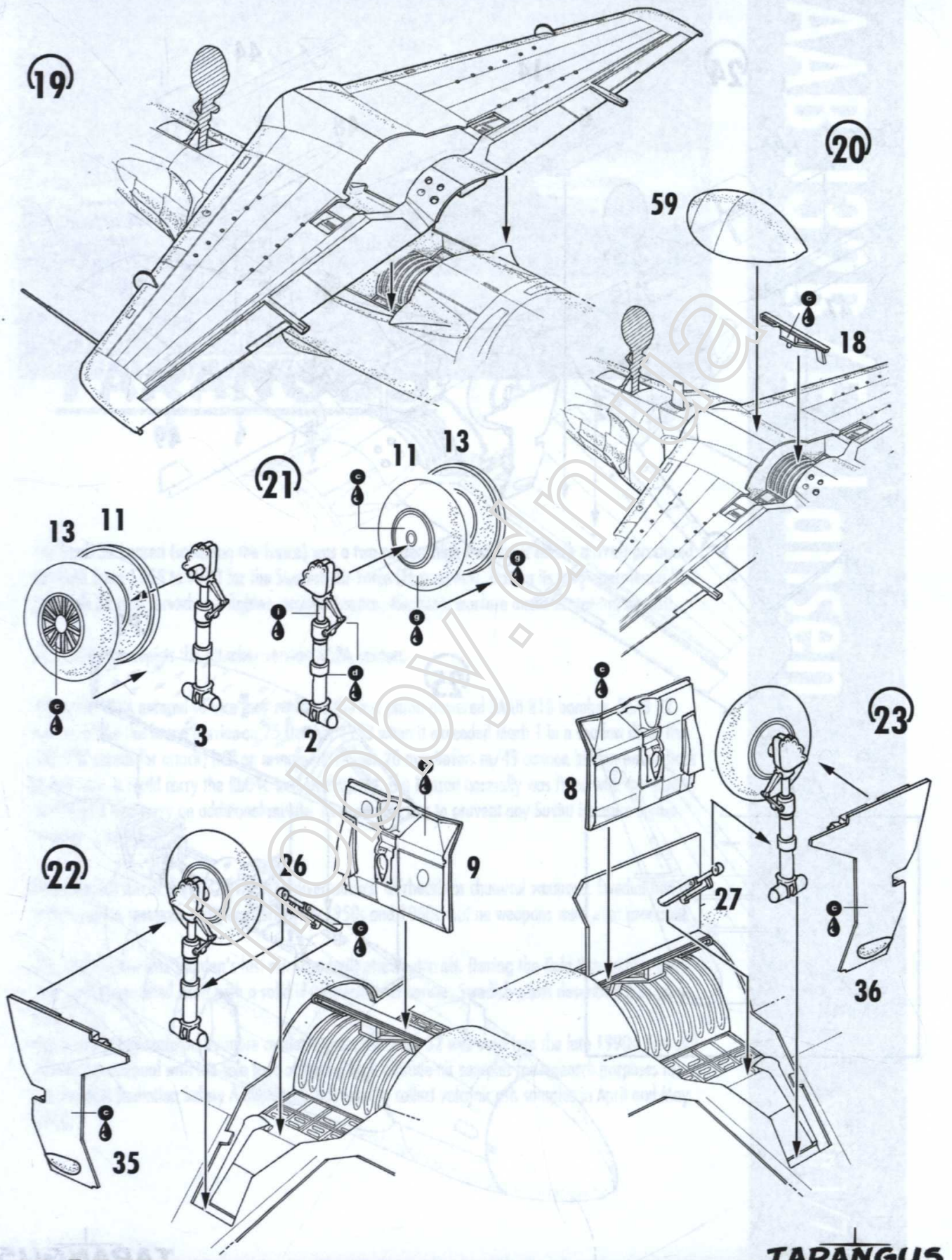

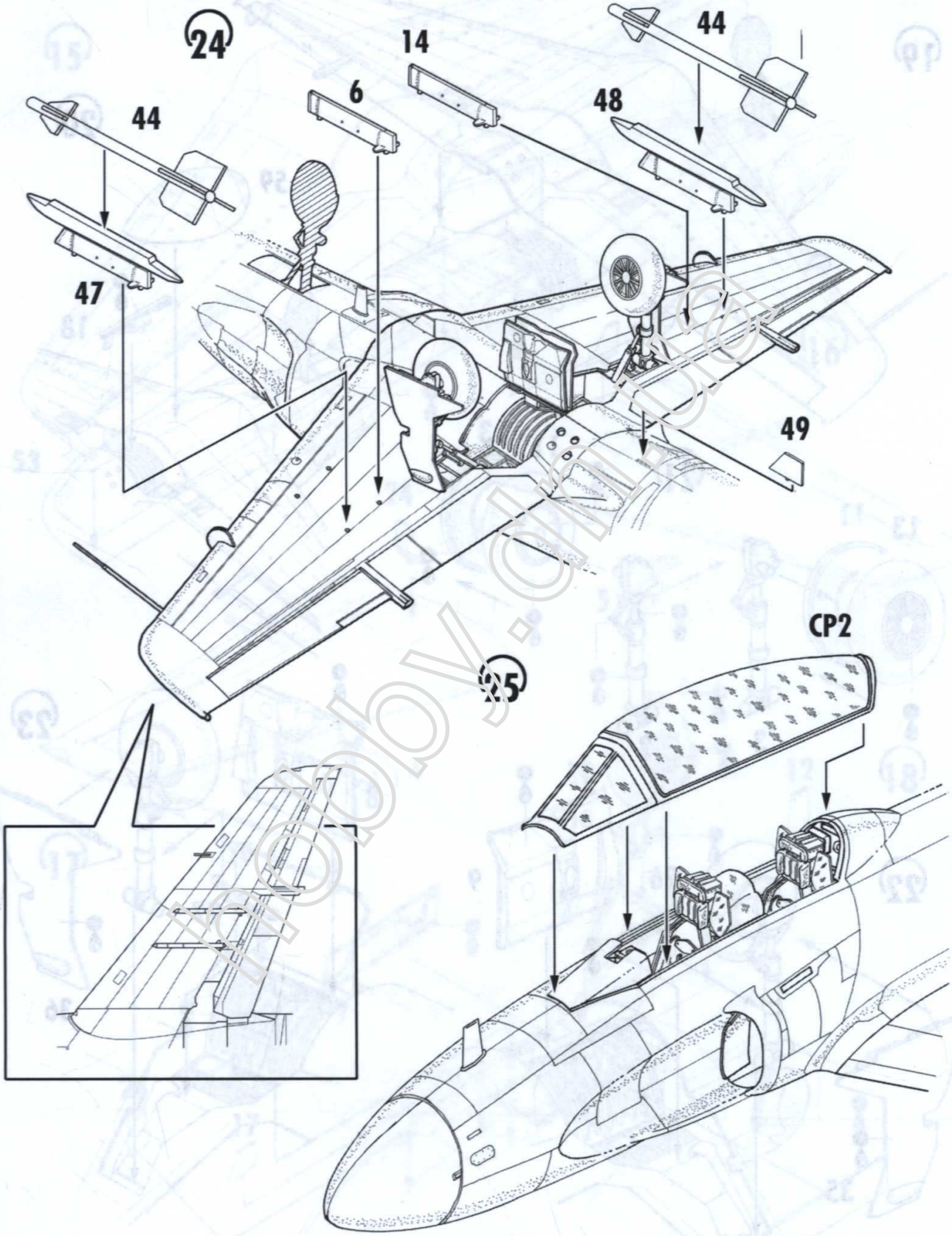

Painting and decalling guide.

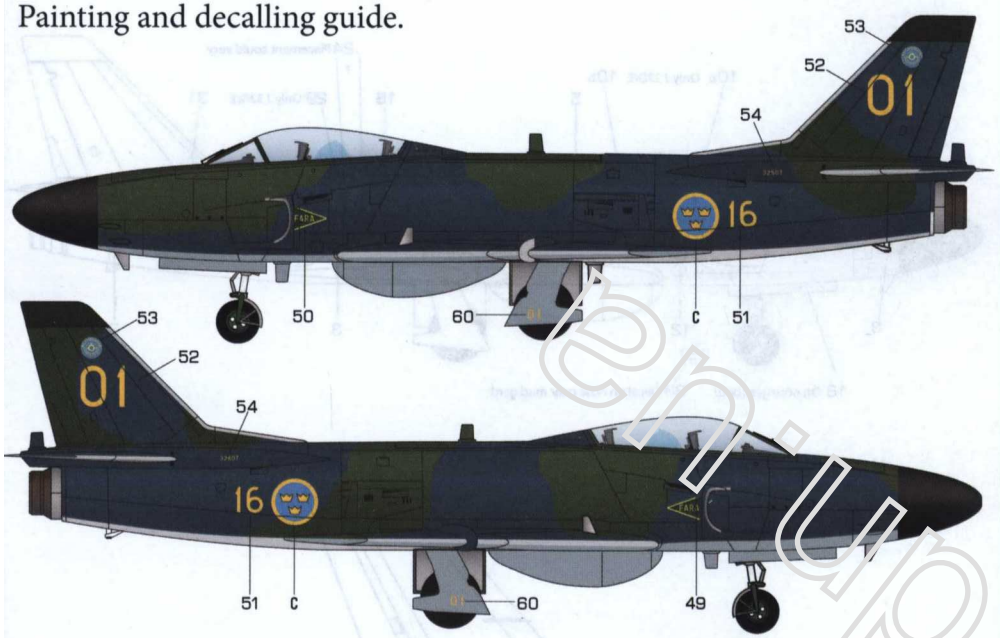

Closest matching colours:

- **Olive green 325M** (J32B upper and lower side)
  Gunze Sangyo H060 — Tamiya XF-61
  Humbrol 116 — FS34079
- **Dark olive green 328M** (J32D/E only)
  Gunze Sangyo H052 — Tamiya XF-13 / XF-62 ?
  Humbrol ? — FS34086 / 34052 ?
- **Dark blue 438M**
  Gunze Sangyo H055 — Tamiya XF-17+03?
  Humbrol 77 — FS35042 / 35045
- **Blue Grey 058M**
  Gunze Sangyo H053 — Tamiya XF-66 / XF-53 ?
  Humbrol 175 — FS36173 / 36314
- **Black / antrazit**

NOTE!
The rear part of the lower fuselage was unpainted metal. See stencilling page for information.

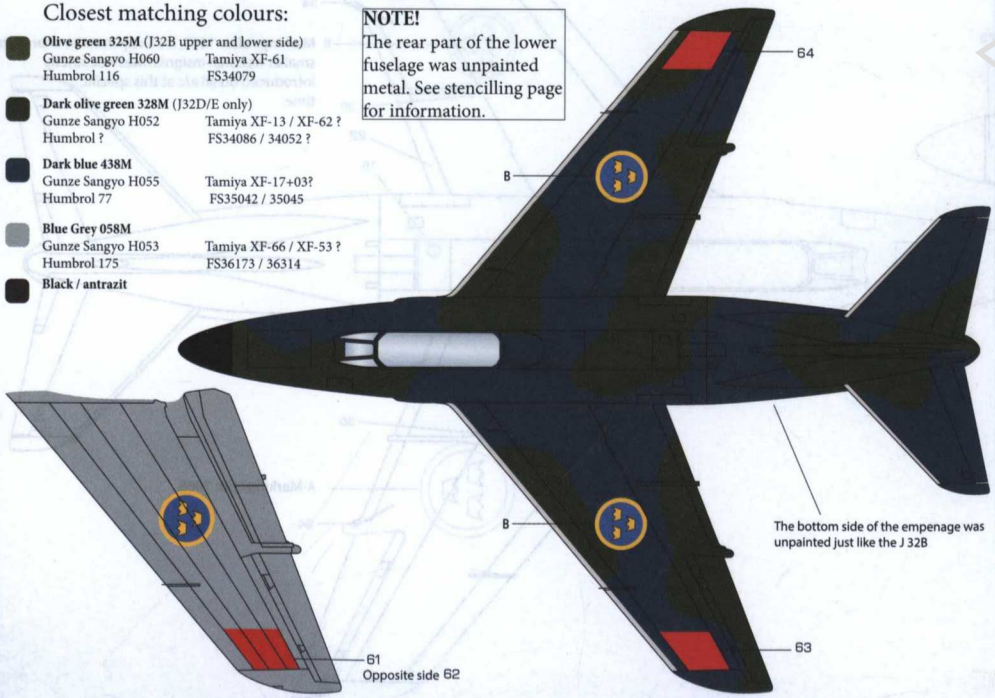

Aircraft information:

32532, J 32B, F12 - 32 from Kalmar wing during the autumn exercise in 1968 marked with the Ö68 squares. Use early type of stencils "a" on decals sheet. It may be possible that the aircraft was marked with the reduced size of the national insignias (B) on the wings.

32536, J 32B, F1 - 36 from Hässlö/Västerås wing.

32615, J 32B, F4 - 15 from Frösön/Östersund wing, early 1970ies. This aircraft had earlier been marked with the Ö68 squares (fluorescent red) that left covered areas in a unbleached condition compared with the rest of the airframe. Use early type of stencils "a" on decals sheet. It's likely that the aircraft was marked with the reduced size of the wing surface national insignias (B) that were introduced 1968. It was also fairly common not to remove the red squares on the bottom side of the wings. After 1969, F4 was the only wing to fly J 32B until the when it was replaced by J35D Draken (from F10).

32507, J 32E, F16 - 01 from Uppsala wing. Jamming aircraft 1996. Use late type of stencils "b" on decals sheet and small national insignias. This airframe was later placed on a stand at the highway E4 close to Linköping.

Stencilling guide.